LCBO

LCBO

PROJECT #312 - WELLAND

STANDARD DETAIL BOOKLET

ISSUED FOR TENDER
SEPTEMBER 2020

IBI

NOTE: SUPPLEMENTAL FINISHES SCHEDULE TO SUPERCEDE SAMPLE BOARDS

FINISHES SCHEDULE (1 of 2)

PLASTIC LAMINATE

NO.	MATERIAL	COLOUR	DESCRIPTION	SOURCE	COMMENTS	LOCATION
PL01	PLASTIC LAMINATE	SMOKEY WHITE	NEVAMAR ARP SURFACE 'SMOKEY WHITE' TEXTURED #S7027T	McFADDEN'S 2164 BUCKINGHAM RD. OAKVILLE, ONT. L6H 6M7 CONTACT: LUCIA NIU TEL: (416) 674-3333		KITCHEN/DEMO, STAFF LUNCHROOM, WASHROOMS
PL02	PLASTIC LAMINATE	DARK GREY	WILSONART 'SLATE GREY' #D91-60 FINISH: MATTE	WILSONART CANADA UNIT A, 380 COURTNEYPARK DR. EAST MISSISSAUGA ON L5T 2S4 CONTACT: KATE HUETHER HUETHEK@WILSONART.COM		STANDARD FIXTURE GENERAL AREAS, CASH/CHECK-OUT, AND MILLWORK FIXTURE KICK BASES WHERE APPLICABLE
PL03	PLASTIC LAMINATE	LIGHT GREY	FORMICA 'GREYSTONE' #464-58	FORMICA CANADA INC. CONTACT: RAMAN SIDHU TEL: (416) 200-9588		FIXTURE DETAILING
PL04	PLASTIC LAMINATE	BLACK	WILSONART CANADA 'BLACK' #1595-60 FINISH: MATTE	WILSONART CANADA UNIT A, 380 COURTNEYPARK DR. EAST MISSISSAUGA ON L5T 2S4 CONTACT: KATE HUETHER HUETHEK@WILSONART.COM		MILLWORK BASES, FIXTURE DETAILING, TYPICAL WAINSCOTING AT OFFICE, CASH/CHECK-OUT & VESTIBULE
PL05	PLASTIC LAMINATE	WHITE OAK	WILSONART 'NEW AGE OAK' #7939-38 FINE VELVET FINISH	WILSONART CANADA UNIT A, 380 COURTNEYPARK DR. EAST MISSISSAUGA ON L5T 2S4 CONTACT: KATE HUETHER HUETHEK@WILSONART.COM		GENERAL RETAIL FIXTURE AND FASCIA DETAILING
PL06	PLASTIC LAMINATE	SPECKLE GREY	COLOUR: #P-344RM 'INUKSHUK GREY' FINISH: MATTE	ARBORITE 111 RACE STREET PARIS, ONTARIO N3L 3G9 TEL: (647) 206-8553 CONTACT: LESLEY HEYS		STAFF KITCHEN COUNTER, TRAINING ROOM COUNTER, MANAGER'S OFFICE COUNTER & PORTABLE TASTING BAR COUNTER
PL07-PL12	RESERVED					

PAINT FINISHES

NO.	MATERIAL	COLOUR	DESCRIPTION	SOURCE	COMMENTS	LOCATION
PT13	PAINT	WHITE	POLYESTER WHITE #QC 28317	NEELAND'S GROUP LIMITED 4131 PALLADIUM WAY, BURLINGTON, ON. CONTACT: SCOTT CORBETT TEL: (905) 332-4555, (416) 798-9705	PROVIDE MATCHING CAULKING COLOUR	WALK-IN COLDROOM PREFABRICATED WALL & CEILING FINISH
PT14	PAINT	WHITE	PRODUCT: BENJAMIN MOORE ACRYLIC INT LATEX COLOUR#:OC-118 COLOUR:'SNOWFALL WHITE' FINISH: FLAT	BENJAMIN MOORE CO. LTD. 7070 MISSISSAUGA ROAD, STE 100 CONTACT: GLORIA RINALDI T: (905) 761-4819 C:416-428-6461	LEED INITIATIVE	GENERAL RETAIL DRYWALL CEILINGS AND UNDERSIDE OF DRYWALL BULKHEADS, UNDERSIDE OF ROOF DECK, ALL MECHANICAL DUCTWORK, ALL ELECTRICAL CONDUIT, ALL PLUMBING, ALL BARE BLDG. SERVICES, UNISTRUT & THREADED RODS ETC., LUNCHROOM, TRAINING ROOM, WASHROOM WALLS & MANAGER'S OFFICE (EGGSHELL FINISH), WAREHOUSE (SEMI-GLOSS FINISH)
PT14A	ELASTOMERIC ANTIMICROBIAL COATING	WHITE	TO MATCH PAINT FINISH NO. PT14	PENNKOTE LIMITED 516 FINLEY AVE., AJAX, ON L1S 2E3, TEL: (905) 683-6447	SUBMIT SAMPLE FOR APPROVAL	JANITOR ROOM WALLS & CEILING
PT15	PAINT	LIGHT GREY	VIC STORE FIXTURES COLOUR #P88	VIC STORE FIXTURES INC. TEL: 1-888-758-0626		WALK-IN COLDROOM FLOOR GONDOLA BACK PANEL
PT16	POWDER-COAT	FLAT BLACK	PRODUCT ID#: ES642N4 FINISH: SMOOTH MATTE	PROTECH POWDERCOATING SALES@PROTECHPOWDER.COM	SUBMIT SAMPLE FOR APPROVAL	TYP. PERIMETER SHELVING, GONDOLA & BCR FIXTURES, SHELF COMPONENTS (BRACKETS, POSTS ETC) EXCEPT METAL SHELVES
PT16A	POWDER-COAT	GLOSS BLACK	PRODUCT:PROTECH ZT311N21 SUPER DURABLE FINISH: FLAG BLACK	PROTECH POWDERCOATING SALES@PROTECHPOWDER.COM	SUBMIT SAMPLE FOR APPROVAL	ON ALL FLAT SHELF SURFACES
PT17	PAINT	DARK GREY	COLOUR: #SW 7026 'GRIFFIN' FINISH: SATIN	SHERWIN WILLIAMS CONTACT: DEAN GIVELAS C:(416)-432-6975 T: (905)-507-0166 EXT 110	LEED INITIATIVE	TYPICAL PERIMETER & GONDOLA METAL SHELVING UNIT KICK BASES AND REFRIGERATED GONDOLA KICK BASE
PT18	RESERVED					
PT19	PAINT	MEDIUM GREY	COLOUR: #SW 9170 'ACIER' FINISH: EGGSHELL	SHERWIN WILLIAMS CONTACT: DEAN GIVELAS C:(416)-432-6975 T: (905)-507-0166 EXT 110		BCR WALL - EGGSHELL FINISH
PT20	PAINT	LIGHT GREY	PRODUCT: BEN #K626 ACRYLIC INT LATEX COLOUR: #OC-24 'WINDS BREATH' FINISH: EGGSHELL	BENJAMIN MOORE CO. LTD. 7070 MISSISSAUGA ROAD, STE 100 CONTACT: GLORIA RINALDI T: (905) 761-4819 C:416-428-6461	SUBMIT SAMPLE FOR APPROVAL	GENERAL RETAIL AREA WALLS & BULKHEADS
PT21	ELASTOMERIC ANTIMICROBIAL COATING	LIGHT GREY	TO MATCH PAINT FINISH NO. PT20	PENNKOTE LIMITED 516 FINLEY AVE., AJAX, ON L1S 2E3 TEL: (905) 683-6447	SUBMIT SAMPLE FOR APPROVAL	VESTIBULE WALLS/DOOR TO SLIDING GRILLE ENCLOSURE. VESTIBULE COAT STORAGE IN PEARL FINISH
PT22-PT23	RESERVED					
PT24	POWDERCOAT PAINT	MEDIUM GREY	COLOUR/RAL: IRON GLIMMER P3 PRODUCT ID: 49/70200 TYPE: POLYESTER FINISH: METALLIC	TIGER DRYLAC CANADA INC. 110 SOUTHGATE DRIVE, GUELPH, ONTARIO N1G 4P5 TEL: (519) 766-4781	SUBMIT SAMPLE FOR APPROVAL	FIXTURE DETAILING & WALK-IN COLDROOM METAL SHELVING
PT25	PAINT	BLACK	PRODUCT: BENJAMIN MOORE ACRYLIC INT LATEX COLOUR#:2133-10 COLOUR:'ONYX' FINISH: SATIN	BENJAMIN MOORE CO. LTD. 7070 MISSISSAUGA ROAD, STE 100 CONTACT: GLORIA RINALDI T: (905) 761-4819 C:416-428-6461		FEATURE WALLS ON BCR/BEER ALCOVE
PT26	PAINT	DARK BEIGE	COLOUR: #HC-34 'WILMINGTON TAN' FINISH: ALKYD, LOW LUSTRE	BENJAMIN MOORE CO. LTD. 7070 MISSISSAUGA ROAD, STE 100 CONTACT: GLORIA RINALDI T: (905) 761-4819 C:416-428-6461	SUBMIT SAMPLE FOR APPROVAL	WAREHOUSE MAN DOORS (EXTERIOR SIDE ONLY) USED W/ BRICK & DRYVIT EXTERIOR

PAINT FINISHES

NO.	MATERIAL	COLOUR	DESCRIPTION	SOURCE	COMMENTS	LOCATION
PT27	PAINT	GREY	COLOUR: #1552 'RIVER REFLECTIONS' FINISH: ALKYD, LOW LUSTRE	BENJAMIN MOORE CO. LTD. 7070 MISSISSAUGA ROAD, STE 100 CONTACT: GLORIA RINALDI T: (905) 761-4819 C:416-428-6461	SUBMIT SAMPLE FOR APPROVAL	MEZZANINE STAIRS, WAREHOUSE DOOR FRAMES, LUNCHROOM, WASHROOMS AND JANITOR ROOM DOOR & FRAMES

WOOD FINISHES

NO.	MATERIAL	COLOUR	DESCRIPTION	SOURCE	COMMENTS	LOCATION
WD28	WOOD VENEER	WHITE OAK	NATURAL QUARTER CUT OAK VENEER WITH POLYURETHANE MATTE FINISH, 'AG LIGHT OAK', QUARTERED, COLOR: MEDIUM, PART #50.60'	BROOKSIDE VENEERS LTD. CONTACT: RICH H. RICHH@BROOKSIDEVENEERS.COM	SUBMIT SAMPLE FOR APPROVAL; VENEER PRODUCT IS LAMINATED TO PHENOLIC BACKER 1mm THICK, COMES IN 4'X10' SHEET	WOOD FEATURE WALL, VINTAGES RUNWAY METAL I-BEAM, VINTAGES WOOD CRATE, VINTAGES RISER BACK PANEL AT FEATURE WALL PERIM. SHELVING
WD29	SOLID WOOD	WHITE OAK	RIFT CUT WHITE OAK AND COORDINATING VENEER W/ NON-YELLOWING SATIN SEALER	MILLWORK CONTRACTOR TO SUPPLY & INSTALL	SAMPLE ON BOARD FOR REFERENCE ONLY. MATCH TO CONTROL SAMPLE SUPPLIED BY LCBO. SUBMIT SAMPLE FOR APPROVAL TO LCBO.	WOODWORK TRIM GENERAL RETAIL AREA FIXTURES

CEILING FINISHES

NO.	MATERIAL	COLOUR	DESCRIPTION	SOURCE	COMMENTS	LOCATION
CT33	CEILING	WHITE	SUSPENDED T-BAR CEILING BY AQUAROCK #1182-CRF-1, COLOUR: WHITE SIZE: 24" X 24" SQUARE EDGE LAY-IN WITH WHITE #830 ALL ALUMINUM 15/16" EXPOSED T-BAR GRID SYSTEM BY CHICAGO METALLIC PROVIDE 4" HIGH 'INFINITY' PERIMETER METAL TRIM ALONG PERIMETER OF T-BAR CEILING, 'ENGINEERED (STRAIGHT EDGE) SERIES', BY CHICAGO METALLIC C/W REQUIRED CORNER KITS, SPLICE PLATES, GRID CLIPS, ETC. AS REQUIRED	DISTRIBUTOR: CERTAIN TEED CEILINGS CONTACT: NANCY McPHERSON TEL: 905-823-9881 CELL: 647-825-6238 EMAIL: nancy.mcpherson@saint-gobain.com DISTRIBUTOR: ARRLIN ACOUSTICS CONTACT: MARK NEWMAN or BRIAN SPURR TEL: 416-798-9200		WALK-IN COLDROOM
CT34	RESERVED					
CT35	RESERVED					
CT36	CEILING TILE	WHITE	CGC INC. 'RADAR' #2110 SQUARE EDGE SIZE: 24" x 24" x 5/8" COLOUR: WHITE	CGC INC. 350 BURNAMTHORPE RD. W. 5th FLOOR MISSISSAUGA, ONT L5B 3J1 T: (905) 803-5600	FOR FIRE-RATED CEILINGS USE CGC 'RADAR' #2115 24" x 24" x 5/8"	GENERAL RETAIL AREA, SERVICE AREAS & MANAGER'S OFFICE
	T-BAR	WHITE	CGC INC. DONN DX 15/16" EXPOSED FACE T-BAR GRID COLOUR: WHITE		FOR FIRE-RATED CEILINGS USE CGC DONN DXL 15/16" T-BAR GRID	GENERAL RETAIL AREA, SERVICE AREAS & MANAGER'S OFFICE
CT37	RESERVED					
CT38	CEILING TILE	WHITE	ARMSTRONG MESA FINE TEXTURE BEVELLED TEGULAR-#682 COLOUR: WHITE SIZE: 24"x24"x3/4"	ARMSTRONG WORLD INDUSTRIES CANADA 1111 DAVIS DR. #1-254 NEW MARKET, ONT. L3Y 9E5 CONTACT: SARAH WITHEY TEL: (416) 525-0003		
	T-BAR	WHITE	ARMSTRONG SUPRAFINE XL 9/16" EXPOSED TEE SYSTEM COLOUR: WHITE			

GENERAL NOTES:

- THIS FINISHES SCHEDULE IS A STANDARD DOCUMENT, NOT ALL LISTED FINISHES APPLY TO THIS SPECIFIC PROJECT. CONTRACTOR SHALL REFER TO ALL OTHER SUPPORTING DOCUMENTS AND SPECIFICATIONS.

LCBO	CONTEMPORARY FORMAT	REVISION DATE	REV.	1 of 2	ISSUE DATE	STORE TYPE	STORE #
	FINISHES SCHEDULE	2019 NOV	01	FIN	2019 NOV		312

NOTE: SUPPLEMENTAL FINISHES SCHEDULE TO SUPERCEDE SAMPLE BOARDS

FINISHES SCHEDULE (2 of 2)

TILE FINISHES

NO.	MATERIAL	COLOUR	DESCRIPTION	SOURCE	COMMENTS	LOCATION
FL39	CERAMIC TILE	WHITE	COLOURS & DIMENSIONS COLLECTION COLOUR: 'ARTIC WHITE MATTE' SIZE: 4.25" x 8.5" CODE: #QT.CD.ARW.0408MT (INSTALLED IN STACK BOND PATTERN)	OLYMPIA TILE INTERNATIONAL INC. 1000 LAWRENCE AVE. WEST TORONTO, ON, M6B 4A8 CONTACT: PEONY SETO TEL: 416.785.9555 EXT. 254 EMAIL: peony@olympiatile.com	GROUT: BY FLEXTILE #510 'BRIGHT WHITE' UNSANDED 1/8" MAXIMUM THICKNESS	WASHROOM WALL TILE - FINISH HEIGHT OF #39 TO BE FROM 4" A.F.F. TO TOTAL OVERALL HEIGHT OF 42.25" A.F.F. (I.E. 9 FULL WHITE TILES) ALSO STAFF LUNCHROOM BACK SPLASH
FL40	PORCELAIN TILE	DARK GREY	REGAL COLOUR: DARK GREY MATTE SIZE: 12" x 12" CODE: # NY.RG.DGR.1212.MT FINISH: MATTE	OLYMPIA TILE INTERNATIONAL INC. 1000 LAWRENCE AVE. WEST TORONTO, ON, M6B 4A8 CONTACT: PEONY SETO TEL: 416.785.9555 EXT. 254 EMAIL: peony@olympiatile.com	GROUT: FLEXTILE #663 (SANDED) 'NORTH SEA GREY' 1/8" MAX. THICKNESS	WASHROOM, STAFF LUNCHRM. & TRAINING ROOM (FLOOR TILE & WALL BASE) -WALL BASE SIZE: 4" HIGH X 12" LONG
FL41	VINYL BASE	GREY	VINYL WALL BASE COLOUR: #121 CEMENT	JOHNSONITE TEL: (905) 886-8081		WAREHOUSE & RETAIL AREAS (WHEN APPLICABLE)
FL42	PORCELAIN TILE	GREY	SOHO COLLECTION: BY MARAZZI 12" x 24" PORCELAIN TILE BASE 4" HIGH X 12" COLOUR: 'SOHO GREY RETT.' FINISH: MATTE (GENERAL RETAIL) TILE ORIENTATION: BRICK PATTERN FINISH: TEXTURED (VESTIBULE-12" x 12") OR LAB 21 MATTE 12" X 24" PORCELAIN TILE BASE 4" HIGH X 12" COLOUR: 'FOG' (SILVER GREY) FINISH: MATTE CODE: #KM.LB.FOG.1224.MT	OLYMPIA TILE INTERNATIONAL INC. 1000 LAWRENCE AVE. WEST TORONTO, ON, M6B 4A8 CONTACT: PEONY SETO TEL: 416.785.9555 EXT. 254 EMAIL: peony@olympiatile.com	GROUT: FLEXTILE #663 (SANDED) 'NORTH SEA GREY' 1/8" MAX. THICKNESS	GENERAL RETAIL AREA, MANAGER'S OFFICE, VINTAGES & BCR (FLOOR TILE & WALL BASE) PROVIDE 4" HIGH x 12" LONG TILE BASE (CUT FROM SPECIFIED 12" x 24" TILES) TO ALL PERIMETER WALLS AS PER INTERIOR ELEVATIONS. TILE TO BE INSTALLED IN 30/70 INFINITY PATTERN (CASCADES OR STEPS) VESTIBULE + RAMP TILE SPEC: LAB 21 TEXTURED 12" X 12" PORCELAIN TILE COLOUR: 'FOG' (SILVER GREY) FINISH: TEXTURED
FL43	PORCELAIN TILE	SILVER GREY	LAB 21 STRUCTURED 12" x 12" PORCELAIN TILE COLOUR: 'FOG' (SILVER GREY) FINISH: STRUCTURED CODE: #KM.LB.FOG.1212.ST	OLYMPIA TILE INTERNATIONAL INC. 1000 LAWRENCE AVE. WEST TORONTO, ON, M6B 4A8 CONTACT: PEONY SETO TEL: 416.785.9555 EXT. 254 EMAIL: peony@olympiatile.com	GROUT: FLEXTILE #663 (SANDED) 'NORTH SEA GREY' 1/8" MAX. THICKNESS	VESTIBULE (FLOOR TILE & WALL BASE) -WALL BASE SIZE: 4" HIGH X 12" LONG
FL44	MARMOLEUM	GREY	MARMOLEUM MODULAR BY FORBO COLOUR: T2629 'EIGER' SIZE: 10" x 20" GAUGE: 1/10" (2.5mm)	FORBO FLOORING SYSTEMS 25 POLLARD STREET RICHMOND HILL, ON, L4B 1A8 CONTACT: CHRISTIE WHITE TEL: 416.661.2351 CELL: 416.520.2127 EMAIL: christie.white@forbo.com		GENERAL RETAIL AREA AND MANAGER'S OFFICE. PROVIDE 4" HIGH VINYL WALL BASE FIN. NO. 41 TO ALL PERIMETER WALLS AS PER INTERIOR ELEVATIONS.
FL45-FL54	RESERVED					

METAL & MISC. FINISHES

NO.	MATERIAL	COLOUR	DESCRIPTION	SOURCE	COMMENTS	LOCATION
MT55	METAL	SATIN STAINLESS STEEL			SUBMIT SAMPLE FOR APPROVAL	GENERAL RETAIL AREA FIXTURE DETAILING
MC56	REFER TO THE SRRS					
MC57	BULLETIN BOARD	GREY	BULLETIN BOARD #2182	PHOENIX FLOOR & WALL PRODUCTS INC. CONTACT: CHRISTIE WHITE TEL: (416) 661-2351		
MC58-MC61						

EXTERIOR FINISHES

NO.	MATERIAL	COLOUR	DESCRIPTION	SOURCE	COMMENTS	LOCATION
EX62	BRICK (FIELD)	YELLOW	COLOUR: SIERRA SANDSTONE SMOOTH SIZE: 90mm H. x 90mm D. x 290mm L. METRIC JUMBO FORMAT MORTAR COLOUR: NATURAL GREY	MERIDIAN BRICK 5155 DUNDAS STREET WEST BURLINGTON ON, L7R 3Y2 CONTACT: TERRY KLINGSPOHN CELL: (416) 801-1638 TEL: (800) 263-6229 EMAIL: terry.klingspohn@meridianbrick.ca		EXTERIOR WALLS
EX63	BRICK (SOLDIER COURSE)	DARK GREY	PRODUCT: NOBLE ARCHITECTURAL BLOCK COLOUR: CHARCOAL FINISH: BUFF SIZE: 3 5/8" H. x 3 3/8" D. x 11 5/8" L. MORTAR COLOUR: NATURAL GREY	MANUFACTURER: PERMACON GROUP DISTRIBUTED BY: PERMACON GROUP MILTON, ON. CONTACT: MARIO NUNES CELL: (416) 578-1903 TEL: (519) 740-6000 EMAIL: mnunes@permacon.ca		EXTERIOR WALLS-SOLDIER COURSE ABOVE AWNINGS & BETWEEN BRICK PIERS
EX64	CONCRETE BLOCK (BASE)	DARK GREY	PRODUCT: NOBLE ARCHITECTURAL BLOCK COLOUR: CHARCOAL FINISH: BUFF SIZE: 7 5/8" H. x 3 3/8 D. x 23 5/8" L. MORTAR COLOUR: NATURAL GREY OR PRODUCT: CAMBRIDGE SERIES COLOUR: DIAMOND BLACK FINISH: BUFF SMOOTH	MANUFACTURER: PERMACON GROUP DISTRIBUTED BY: PERMACON GROUP MILTON, ON. CONTACT: MARIO NUNES CELL: (416) 578-1903 TEL: (519) 740-6000 EMAIL: mnunes@permacon.ca RICHVALE YORK BLOCK INC. GORMLEY, ON CONTACT: LUCIANO TESEO TEL: 416-213-7444 EXT. 236 ORDER DESK: 416-213-7447 EMAIL: lteseo.richvaleyork@bellnet.ca		CONCRETE BLOCK BASE
EX65	DOOR & WINDOW FRAMES	CLEAR ANODIZED ALUMINUM	CATEGORY: ALUMILITE CLEAR ANODIZED FINISH COLOUR: #17 CLEAR	MANUFACTURER: KAWNEER CONTACT: SUSIE DAGRACA TEL: (905) 673-5400	EXTERIOR CAULKING PRODUCT: TREMCO COLOUR: ANODIZED ALUM.	EXTERIOR GLAZING
EX66	SPANDREL GLAZING	GREY	OPACI-COAT-300 (OR APPROVED EQUAL) COLOUR: #3-1850 'KENDALL CHARCOAL' (BENJAMIN MOORE #HC-166)	ICD COATINGS TEL: (360) 546-2286	SUBMIT SAMPLE FOR APPROVAL	EXTERIOR SPANDREL GLAZING
EX67A	ALUMINUM COMPOSITE PANEL	BRIGHT SILVER METALLIC		AS PER THE LBBR		CANOPIES ONLY
EX67B	PREFINISHED METAL FLASHING	BRIGHT SILVER METALLIC		AS PER THE LBBR		PARAPET & MISC. FLASHINGS
EX68	POWDERCOAT PAINT	MEDIUM GREY	COLOUR: IRON GLIMMER P3 (FOR EXTERIOR USE) PRODUCT ID: 49/70200 TYPE: POLYESTER FINISH: METALLIC	TIGER DRYLAC CANADA INC. GUELPH, ONTARIO TEL: (519) 766-4781		EXTERIOR DISPLAY BANNER HARDWARE LOCATED ON BRICK PIERS
EX69	POWDERCOAT PAINT	MEDIUM GREY	MATHEWS PAINT- MPC 101 42 MP12734 GARRISON MATTE FINISH -2 COATS	FORWARD SIGNS CONTACT: MARLENE BUSSINEAU EMAIL: marlene.bussineau@forwardsigns.com		EXTERIOR 'LCBO' ILLUMINATED TRIM CAPS
EX70-EX76	RESERVED					
EX77	CONCRETE BLOCK (BASE)	LIGHT GREY	PRODUCT: CAMBRIDGE SERIES COLOUR: ONYX FINISH: SMOOTH MORTAR COLOUR TO MATCH	RICHVALE YORK BLOCK INC. GORMLEY, ON CONTACT: LUCIANO TESEO TEL: 416-213-7444 TOLL FREE: 1877-792-5625 EMAIL: lteseo.richvale@bellnet.ca		CONCRETE BLOCK BASE
EX78-EX79	RESERVED					
EX80	PREFINISHED SIDING	GREY	HARDIE-PLANK LAP SIDING COLOUR: MONTEREY TAUPE TEXTURE: SELECT CEDARMILL WIDTH: 6.25" (5" EXPOSURE)	MANUFACTURER: JAMES HARDIE TEL: 1-866-4-HARDIE		EXTERIOR CLADDING (FIELD)
EX81	PREFINISHED SIDING TRIM BOARDS	CREAM	HARDIE-PLANK LAP SIDING COLOUR: COBBLE STONE WIDTH: 4.5"	MANUFACTURER: JAMES HARDIE TEL: 1-866-4-HARDIE		EXTERIOR CLADDING (TRIM)
EX82	RESERVED					
EX83	PAINT	GREY	COLOUR #HC-108 'SANDY HOOK GRAY' FINISH: ALKYD, LOW LUSTRE	BENJAMIN MOORE CO. LTD. 7070 MISSISSAUGA ROAD, STE 100 CONTACT: GLORIA RINALDI T: (905) 761-4819 C:416-428-6461	SUBMIT SAMPLE FOR APPROVAL	WAREHOUSE MAN DOORS (EXTERIOR SIDE ONLY) USED W/ EXTERIOR SIDING & DRYVIT ONLY
EX84	DRYVIT	GREY	SANDPEBBLE FINE DPR LCBO STAINLESS	DRYVIT SYSTEMS CANADA LTD. CONTACT: ANDREAS LUETH TEL: (905) 856-7310 EXT. 29	SUBMIT SAMPLE FOR APPROVAL	EXTERIOR WALLS
EX85	DRYVIT	GREY	SANDPEBBLE FINE DPR LCBO GULL GRAY	DRYVIT SYSTEMS CANADA LTD. CONTACT: ANDREAS LUETH TEL: (905) 856-7310 EXT. 29	SUBMIT SAMPLE FOR APPROVAL	EXTERIOR WALLS

WALLFINDING & GRAPHICS

NO.	MATERIAL	COLOUR	DESCRIPTION	SOURCE	COMMENTS	LOCATION
WF86	PAINT	LIGHT GREY	PRODUCT: BENJAMIN MOORE ACRYLIC INT LATEX COLOUR#: SW 9170 COLOUR: 'ACIER' FINISH: GLOSSY	BENJAMIN MOORE CO. LTD. 7070 MISSISSAUGA ROAD, STE 100 CONTACT: GLORIA RINALDI T: (905) 761-4819 C:416-428-6461		WAYFINDING CRESTS
WF87	PAINT	BLACK	PRODUCT: BENJAMIN MOORE ACRYLIC INT LATEX COLOUR#:2133-10 COLOUR: 'ONYX' FINISH: SATIN	BENJAMIN MOORE CO. LTD. 7070 MISSISSAUGA ROAD, STE 100 CONTACT: GLORIA RINALDI T: (905) 761-4819 C:416-428-6461		WAYFINDING SIGNAGE LETTERS
WF88	PAINT	WHITE	PRODUCT: BENJAMIN MOORE ACRYLIC INT LATEX COLOUR#:OC-118 COLOUR: 'SNOWFALL WHITE' FINISH: SATIN	BENJAMIN MOORE CO. LTD. 7070 MISSISSAUGA ROAD, STE 100 CONTACT: GLORIA RINALDI T: (905) 761-4819 C:416-428-6461		WAYFINDING SIGNAGE LETTERS

GENERAL NOTES:

- THIS FINISHES SCHEDULE IS A STANDARD DOCUMENT, NOT ALL LISTED FINISHES APPLY TO THIS SPECIFIC PROJECT. CONTRACTOR SHALL REFER TO ALL OTHER SUPPORTING DOCUMENTS AND SPECIFICATIONS.

LCBO	CONTEMPORARY FORMAT FINISHES SCHEDULE	REVISION DATE	REV.	2 of 2	ISSUE DATE	STORE TYPE	STORE #
		2019 NOV	01	FIN	2019 NOV		312

ITEM #	DETAIL TITLE	WORK BY:
	B100 CHECK-OUT AREA/VESTIBULE	
B101	CART CORAL	GC
B102	VESTIBULE COAT STORAGE	MW
B103	WINDOW SILL DETAIL	MW
B104	CASH/CHECK-OUT DESK W/ GLASS PARTITION & BASKET WELL	MW
B105	RESERVED	
B106	'U'-SHAPED CASH/CHECK-OUT DESK W/ BASKET WELL	MW
B107	MERCHANDISER FOR U-SHAPED CASH DESK	MW
B108	RESERVED	
B109	'U'-SHAPED CUSTOMER SERVICE DESK W/ BASKET WELL	MW
B110	INFORMATION BOARD	MW
B111	DOUBLE-SIDED CORK BOARD	MW
B112	FREE-STANDING BOX STORAGE	MW
B113	BOX STORAGE	MW
B114	CASH DESK MERCHANDISER - TYPE 2	MW
B115-B116	RESERVED	
B117	GRILLE ENCLOSURE POCKET DOOR PANEL DETAIL	MW
	B200 GENERAL LIST	
B201	4'-0" PERIMETER METAL SHELVING UNIT C/W FASCIA PANEL & METAL TICKET MOULDINGS	SS/GC/MW
B202	3'-0" PERIMETER METAL SHELVING UNIT C/W FASCIA PANEL & METAL TICKET MOULDINGS	SS/GC/MW
B203	PERIMETER SHELVING GABLE/FILLER PANEL	MW
B204-B205	RESERVED	
B206	REFRIGERATION GABLE/FILLER PANEL	MW
B207	2'-0" PERIMETER METAL SHELVING UNIT C/W FASCIA PANEL & METAL TICKET MOULDINGS	SS/GC/MW
B208	TYPICAL P.O.P. FRAME DETAILS	MW
B209	RESERVED	
B210	2" x 2" x 32" METAL CORNER GUARD	MW
B211	U'-SHAPED METAL CORNER (36" HIGH W/ 1 1/4" RETURNS)	MW
B212-B213	RESERVED	
B214	PRODUCT RISER (TYPE A)	MW
B215	PRODUCT RISER (TYPE B)	MW
B216-B218	RESERVED	
B219	REMOVABLE GONDOLA P.O.P FRAME	MW
B220	RESERVED	
B221	4'-0" GONDOLA (3 SHELVES) C/W METAL TICKET MOULDINGS	SS
B222	RESERVED	
B223	3'-0" GONDOLA (3 SHELVES) C/W METAL TICKET MOULDINGS	SS
B224	2'-0" CONVERTIBLE GONDOLA (3 SHELVES) C/W METAL TICKET MOULDINGS	SS
B225	2'-0" CONVERTIBLE GONDOLA (4 SHELVES) C/W METAL TICKET MOULDINGS	SS
B226	RESERVED	
B227	4'-0" GONDOLA (4 SHELVES) C/W METAL TICKET MOULDINGS	GC
B228	3'-0" GONDOLA (4 SHELVES) C/W METAL TICKET MOULDINGS	GC
B229	GONDOLA CATEGORY SIGN	MW
B230-B231	RESERVED	MW
B232	4-HIGH GONDOLA CATEGORY SIGN	MW
B233	FOOD & DRINK STAND	MW
B234	'A'-FRAME FIXTURE	MW
B235	RESERVED	
B236	PORTABLE TASTING BAR	MW
B237	'IMPULSE' FIXTURE	MW
B238	'DEAL OF THE WEEK' FIXTURE	MW
B239	4'-0" PROMO TABLE	MW
B240	3'-3" MARKETPLACE DISPLAY TABLE	MW
B241	NESTING TABLES	MW
B242	5'-0" NESTING TABLE	MW
B243	3'-0" DIA. ENTRANCE TABLE	
B244	DOUBLE-SIDED GIFT/SPIRITS FIXTURE W/ METAL SHELVES (ILLUMINATED) (7'-6" H.)	GC/SS
B245-B246	RESERVED	
B247	GONDOLA METAL END CAP PANEL (54" HIGH)	SS
B248	RESERVED	
B249	GIFT PACKAGING FIXTURE	MW
B250	RESERVED	SS
B251	GONDOLA END METAL DISPLAY SHELVES W/ METAL TICKET MOULDING (TYPE B)	SS
B252	4'-0" PERIMETER METAL SHELVING UNIT C/W FASCIA PANEL & METAL TICKET MOULDINGS (7'-10" H.)	SS/GC/MW
B253	3'-0" PERIMETER METAL SHELVING UNIT C/W FASCIA PANEL & METAL TICKET MOULDINGS (7'-10" H.)	SS/GC/MW
B254	PERIMETER SHELVING GABLE/FILLER PANEL (7'-10" H.)	MW
B255-B256	RESERVED	
B257	2'-0" PERIMETER METAL SHELVING UNIT C/W FASCIA PANEL & METAL TICKET MOULDINGS (7'-10" H.)	SS/GC/MW
B258	RESERVED	
B259	METAL PLINTH (16" DEEP)	GC
B260	RESERVED	
B261	METAL GONDOLA PROMO END	GC/MW
B261a	METAL GONDOLA PROMO END W/ ILLUMINATED TRANS. BOX	GC

ITEM #	DETAIL TITLE	WORK BY:
	B300 VINTAGES	
B262	DOUBLE-SIDED GIFT/SPIRITS FIXTURE W/ METAL SHELVES (ILLUMINATED) (7'-10" H.)	GC/SS
B263	MILLWORK ENCLOSURES AROUND BASE-BLDG COLUMNS AT GONDOLAS	MW
B264-B266	RESERVED	
B267	PERIMETER COLUMN FEATURE (HALF)	MW
B268	1-MODULE GENERAL LIST PERIMETER LOCKABLE DISPLAY (7'-6" H.)	MW
B269	2-MODULE GENERAL LIST PERIMETER LOCKABLE DISPLAY (7'-6" H.)	MW
B270	3-MODULE GENERAL LIST PERIMETER LOCKABLE DISPLAY (7'-6" H.)	MW
B271	3-HIGH 48" PERIMETER METAL SHELVING UNIT W/ WOOD TICKET MOULDING	SS
B272	3-HIGH 36" PERIMETER METAL SHELVING UNIT W/ WOOD TICKET MOULDING	SS
B273	3-HIGH 24" PERIMETER METAL SHELVING UNIT W/ WOOD TICKET MOULDING	SS
B274-B275	RESERVED	
B276	1-MODULE GENERAL LIST PERIMETER LOCKABLE DISPLAY (7'-10" H.)	MW
B277	2-MODULE GENERAL LIST PERIMETER LOCKABLE DISPLAY (7'-10" H.)	MW
B278	3-MODULE GENERAL LIST PERIMETER LOCKABLE DISPLAY (7'-10" H.)	MW
B279	METAL GONDOLA END (NARROW) - GENERAL LIST	SS
B280	3-HIGH 4'-0" METAL FLOOR GONDOLA (NARROW) - GENERAL LIST	SS
B281	3-HIGH 3'-0" METAL FLOOR GONDOLA (NARROW) - GENERAL LIST	SS
B282	3-HIGH 2'-0" CONVERTIBLE FLOOR GONDOLA (NARROW) - GENERAL LIST	SS
B283	4-HIGH 4'-0" METAL FLOOR GONDOLA (NARROW) - GENERAL LIST	SS
B284	4-HIGH 3'-0" METAL FLOOR GONDOLA (NARROW) - GENERAL LIST	SS
B285	4-HIGH 2'-0" CONVERTIBLE FLOOR GONDOLA (NARROW) - GENERAL LIST	SS
B286	DOUBLE-SIDED GIFTS/SPIRITS FIXTURE W/ FRONT & BACK CANOPY ILLUMINATION	GC/SS
B287	DOUBLE-SIDED GIFTS/SPIRITS FIXTURE W/ FRONT CANOPY ILLUMINATION	GC/SS
	B300 VINTAGES	
B301	4'-0" VINTAGES PERIMETER METAL SHELVING UNIT C/W FASCIA PANEL	SS/GC/MW
B302	3'-0" VINTAGES PERIMETER METAL SHELVING UNIT C/W FASCIA PANEL	SS/GC/MW
B303	VINTAGES PERIMETER SHELVING GABLE/FILLER PANEL	MW
B304-B305	RESERVED	
B306	VINTAGES CONSULTANT'S DESK	MW
B307	VINTAGES THC UNIT	GC
B308-B336	RESERVED	
B337	VINTAGES REMOVABLE GONDOLA P.O.P. FRAME	MW
B338	VINTAGES METAL PLINTH (16" DEEP)	SS
B339	VINTAGES 3-HIGH METAL GONDOLA END CAP PANEL	SS
B340	VINTAGES GONDOLA METAL END DISPLAY SHELVES	SS
B341	VINTAGES 4'-0" GONDOLA (3 SHELVES)	SS
B342	VINTAGES 3'-0" GONDOLA (3 SHELVES)	SS
B343	VINTAGES 2'-0" CONVERTIBLE GONDOLA (3 SHELVES)	SS
B344	VINTAGES 4'-0" GONDOLA (4 SHELVES)	SS
B345	VINTAGES 3'-0" GONDOLA (4 SHELVES)	SS
B346	VINTAGES 2'-0" CONVERTIBLE GONDOLA (4 SHELVES)	SS
B347	3-HIGH VINTAGES GONDOLA CATEGORY SIGN	MW
B348	4-HIGH VINTAGES GONDOLA CATEGORY SIGN	MW
B349	METAL GONDOLA END (NARROW) - VINTAGES	SS
B350	3-HIGH 4'-0" METAL FLOOR GONDOLA (NARROW) - VINTAGES	SS
B351	3-HIGH 3'-0" METAL FLOOR GONDOLA (NARROW) - VINTAGES	SS
B352	4-HIGH 4'-0" METAL FLOOR GONDOLA (NARROW) - VINTAGES	SS
B353	4-HIGH 3'-0" METAL FLOOR GONDOLA (NARROW) - VINTAGES	SS
B354	2'-6" VINTAGES PERIMETER METAL SHELVING UNIT C/W FASCIA PANEL	SS/MW
B355	3-HIGH 48" VINTAGES PERIMETER METAL SHELVING UNIT W/ WOOD TICKET MOULDING	SS
B356	3-HIGH 36" VINTAGES PERIMETER METAL SHELVING UNIT W/ WOOD TICKET MOULDING	SS
B357	3-HIGH 24" VINTAGES PERIMETER METAL SHELVING UNIT W/ WOOD TICKET MOULDING	SS
B358	1-MODULE VINTAGES PERIMETER LOCKABLE DISPLAY	GC/MW
B359	2-MODULE VINTAGES PERIMETER LOCKABLE DISPLAY	GC/MW
B360	3-MODULE VINTAGES PERIMETER LOCKABLE DISPLAY	GC/MW
B361	RESERVED	
B362	VINTAGES 4-HIGH METAL GONDOLA END CAP PANEL	SS
B363	VINTAGES DOUBLE-SIDED FIXTURE W/ FRONT LED CANOPY ILLUMINATION	SS
B364	VINTAGES DOUBLE-SIDED FIXTURE W/ FRONT & BACK LED CANOPY ILLUMINATION	SS

ITEM #	DETAIL TITLE	WORK BY:
	B500 VQA	
B501	RESERVED	
B502	VQA REMOVABLE GONDOLA P.O.P. FRAME	MW
B503-B505	RESERVED	
B506	VQA GONDOLA SIGNAGE - TYPE A (4-HIGH)	MW
B507	RESERVED	
B508	VQA GONDOLA SIGNAGE - TYPE B (4-HIGH)	MW
B509-B516	RESERVED	
B517	VQA GONDOLA SIGNAGE - TYPE A (3 HIGH)	MW
B518	VQA GONDOLA SIGNAGE - TYPE B (3-HIGH)	MW
B519	4-HIGH VQA METAL GONDOLA END	SS
B520	4-HIGH 4'-0" METAL FLOOR GONDOLA	SS
B521	4-HIGH 3'-0" METAL FLOOR GONDOLA	SS
B522	3-HIGH VQA METAL GONDOLA END	SS
B523	3-HIGH 4'-0" METAL FLOOR GONDOLA	SS
B524	3-HIGH 3'-0" METAL FLOOR GONDOLA	SS
	B600 WALK-IN COLDROOM	
B601	4'-0" WALK-IN COLDRM PERIMETER METAL SHELVING UNIT C/W FASCIA PANEL	SS/GC
B602	3'-0" WALK-IN COLDRM PERIMETER METAL SHELVING UNIT C/W FASCIA PANEL	SS/GC
B603	WALK-IN COLDROOM END PLINTH	SS
B604	WALK-IN COLDROOM END CAP PANEL	SS
B605	WALK-IN COLDROOM GONDOLA END DISPLAY SHELVES	SS
B606	GONDOLA REMOVABLE P.O.P FRAME	SS
B606a	WALK-IN COLDROOM GONDOLA W/ ILLUMINATED P.O.P. FRAME	SS/GC
B607	WALK-IN COLDROOM GONDOLA CATEGORY SIGN	SS
B608	WALK-IN COLDROOM CONVERTIBLE GONDOLA (4 SHELVES) C/W METAL TICKET MOULDINGS	SS
B609	2'-0" WALK-IN COLDRM PERIMETER METAL SHELVING UNIT C/W FASCIA PANEL	SS/GC
B610	WALK-IN COLDROOM WALL FIXTURE METAL END GABLES	SS
B611	WALK-IN COLDROOM PERIMETER SIGN BAND/WALLPAPER CHANNEL	SS
B612	WALK-IN COLDROOM DOUBLE-SIDED COOLER SHELVING	GC
B613	WALK-IN COLDROOM HALF PALLET DISPLAY	SS
B614	WALK-IN COLDROOM DOUBLE-SIDED COOLER SHELVING MILLWORK FASCIA	MW
B615	WALK-IN COLDROOM 'CRAFT BEER' CANOPY & SIGN HOLDER	SS
	B700 SPECIALTY/PROTOTYPE/ATYPICAL	
B701	3-IN-1 SIT STAND STOOL	GC
B702-B721	RESERVED	
B722	'CELEBRATION' FIXTURE W/ LED ILLUMINATION	GC/SS
B722a	'CELEBRATION' FIXTURE (NON-ILLUMINATED)	SS
B723-B764	RESERVED	
B765	STAFF ROOM DVD SHELF	MW
	B800 OFFICE/SERVICES	
B801	OFFICE GLAZING	MW/GC
B802	TYPICAL OFFICE & WAINSCOTING DETAIL	MW
B803	MANAGER'S OFFICE MILLWORK	MW
B804	STAFF LUNCH ROOM MILLWORK W/ EYE WASH STATION	MW
B805	WASHROOM STORAGE CABINET	MW
B806	JANITOR'S ROOM SHELVING UNIT	GC
B807-B811	RESERVED	
B812	OFFICE DOOR W/ GLASS INSERT	MW/GC
	S100B SIGNAGE/GRAPHICS	
S101B-S102B	RESERVED	
S103B	SUSPENDED PLEXI-GLASS 'SERVICE' SIGN	SV
	R100B REFRIGERATION	
R101B-R103B	RESERVED	
R104B	PERIMETER WINE REFRIGERATION C/W CONTINUOUS P. LAM. FASCIA PANEL & COOLER DOORS (IN GENERAL PURCHASE AREA)	GC/MW
R105B	PERIMETER WINE REFRIGERATION C/W CONTINUOUS METAL FASCIA PANEL & COOLER DOORS (WITHIN BEER ALCOVE)	GC
R106B	PERIMETER BEER REFRIGERATION C/W CONTINUOUS METAL FASCIA PANEL & COOLER DOORS	GC

NOTE:

G.C. IS RESPONSIBLE FOR SUPPLY, INSTALLATION AND CO-ORDINATION OF ALL ITEMS ON THE DETAIL LIST

SS = SHELVING SUPPLIER
GC = GENERAL CONTRACTOR
MW = MILLWORK CONTRACTOR
SV = SIGN VENDOR

LCBO	CONTEMPORARY FORMAT	REVISION DATE	REV.	1 of 1	ISSUE DATE	STORE TYPE	STORE #
	DETAIL LIST	2019 NOV	01	B000	2019 NOV		312

NOTES

- SEE FLOOR PLAN FOR LAYOUT
- LCBO TO CONFIRM CART SIZE & QUANTITY TO ENSURE PROPER FIT INSIDE CORRAL

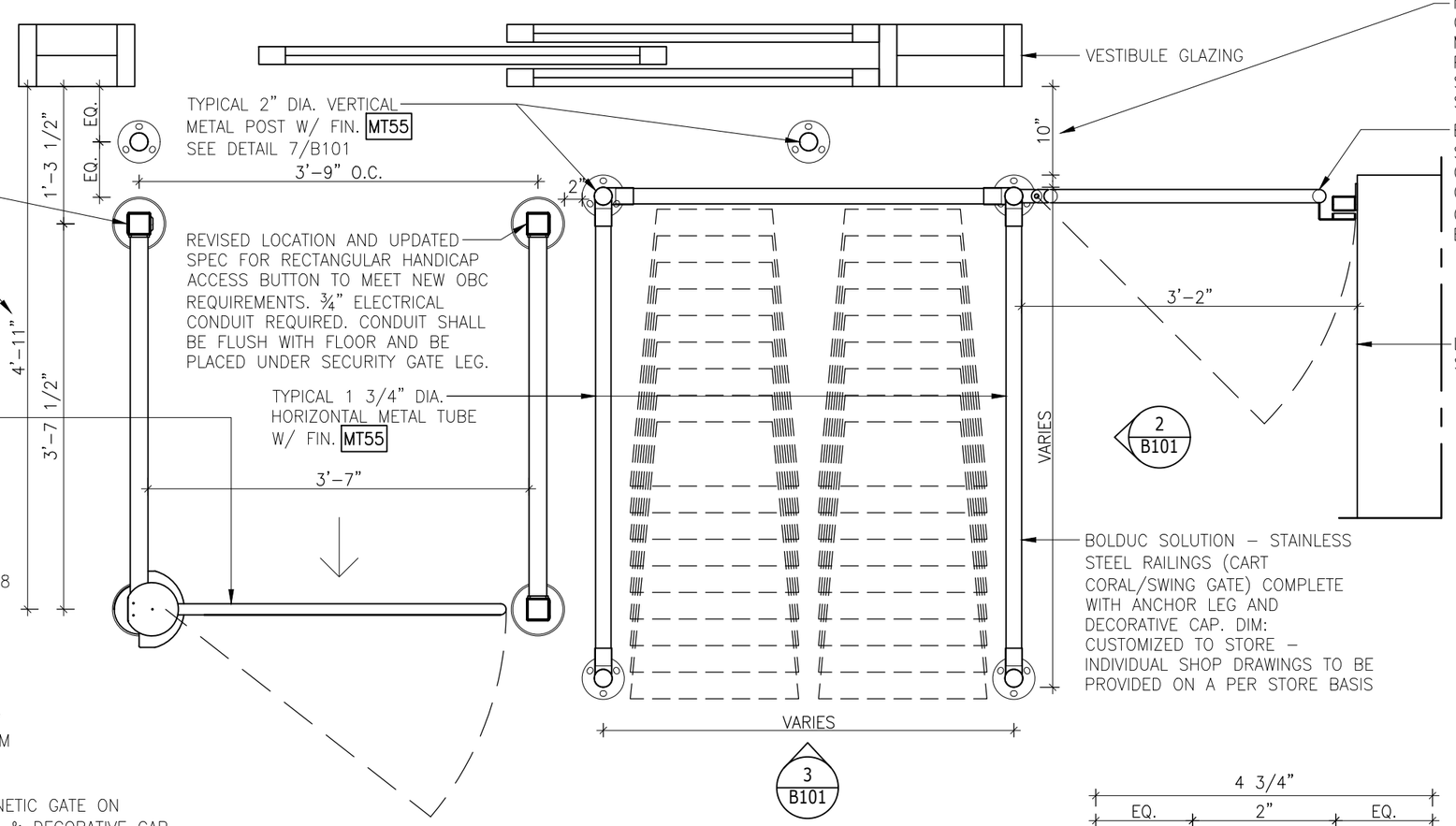

1 B101 PLAN (TYPICAL)
3/4" = 1'-0"

NOTE:

OPTIONAL ALTERNATE FINISH FOR CART CORRAL IS PT16 (BLACK) TO BE CONFIRMED BY LCBO COORDINATOR PRIOR TO FABRICATION - SITE SPECIFIC.

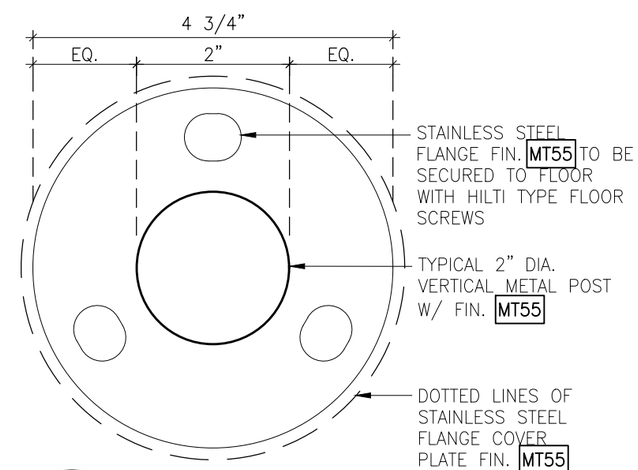

7 B101 DETAIL
6" = 1'-0"

LCBO	B100 CHECK-OUT AREA/VESTIBULE	REVISION DATE	REV.	1 of 2	ISSUE DATE	STORE TYPE	STORE #
	CART CORRAL	2019 NOV	01	B101	2019 NOV		312

NOTE:

OPTIONAL ALTERNATE FINISH FOR CART CORRAL IS PT16 (BLACK) TO BE CONFIRMED BY LCBO COORDINATOR PRIOR TO FABRICATION – SITE SPECIFIC.

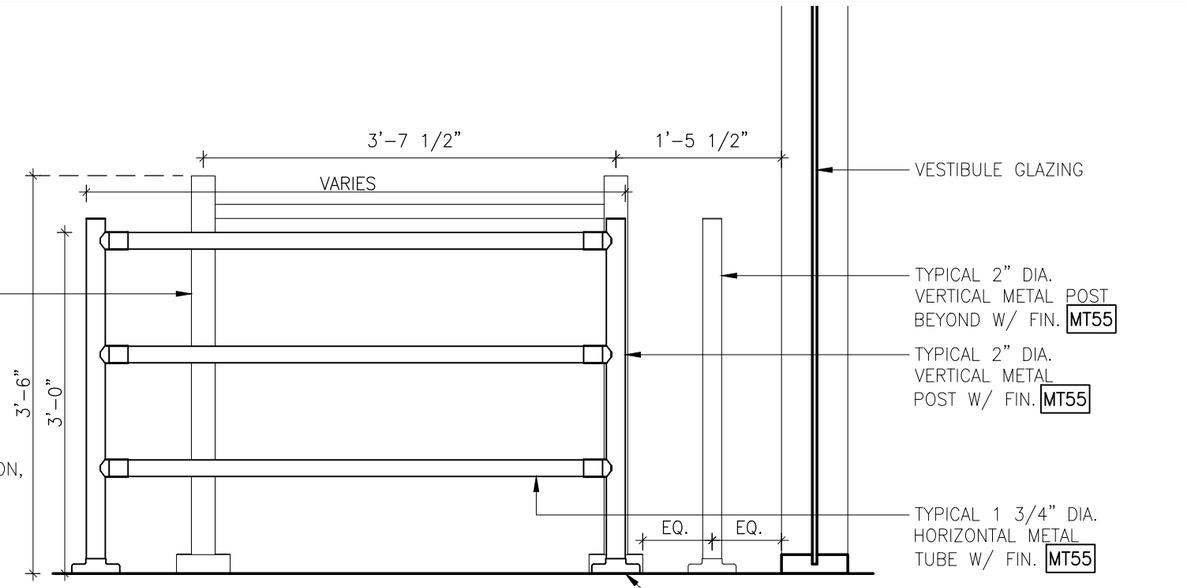

2 B101 SECTION
3/4" = 1'-0"

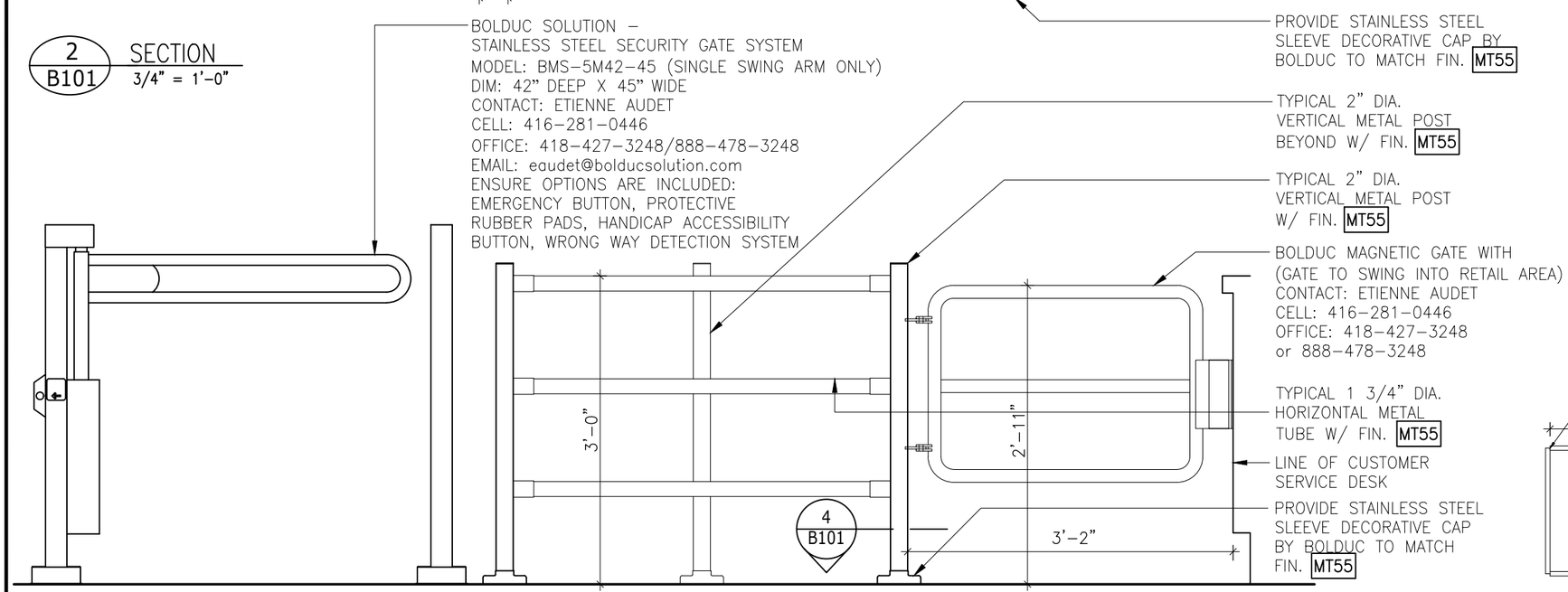

3 B101 FRONT ELEVATION
3/4" = 1'-0"

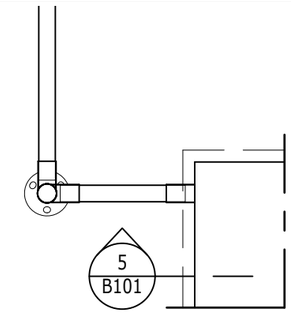

4 B101 PARTIAL PLAN (CS DESK CONNECTION)
3/4" = 1'-0"

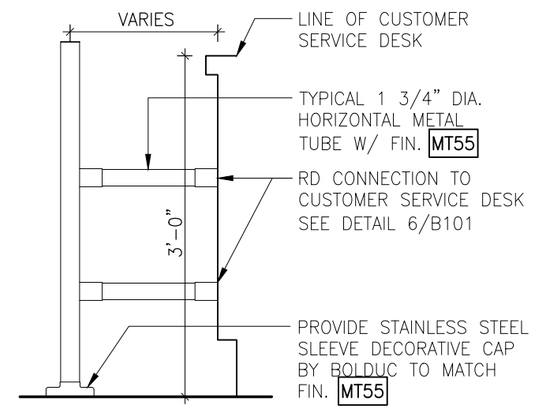

5 B101 ELEVATION (CS DESK CONNECTION)
3/4" = 1'-0"

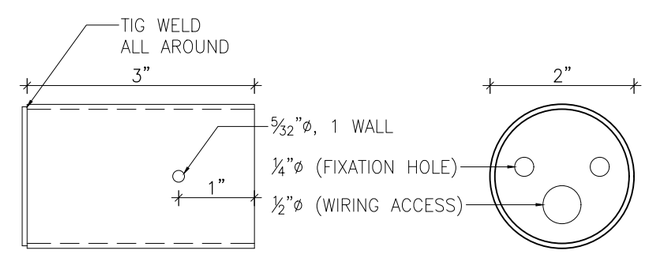

6 B101 RD CONNECTION DETAIL
6" = 1'-0"

LCBO	B100 CHECK-OUT AREA/VESTIBULE	REVISION DATE	REV.	2 of 2	ISSUE DATE	STORE TYPE	STORE #
	CART CORRAL	2019 NOV	01	B101	2019 NOV		312

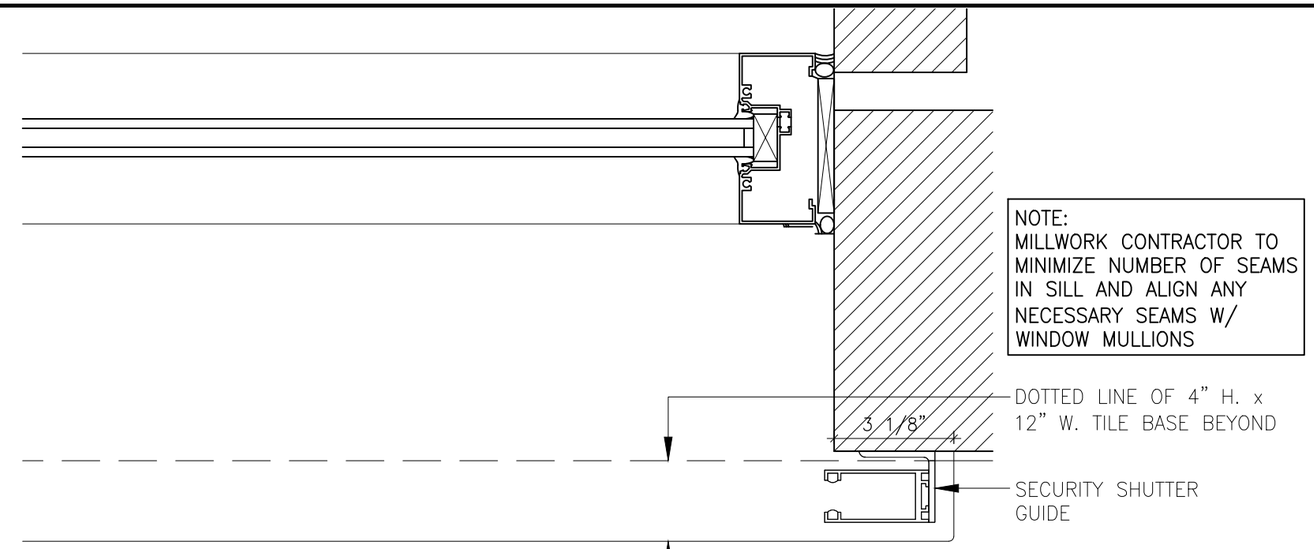

1 B103 PLAN
3" = 1'-0"

2 B103

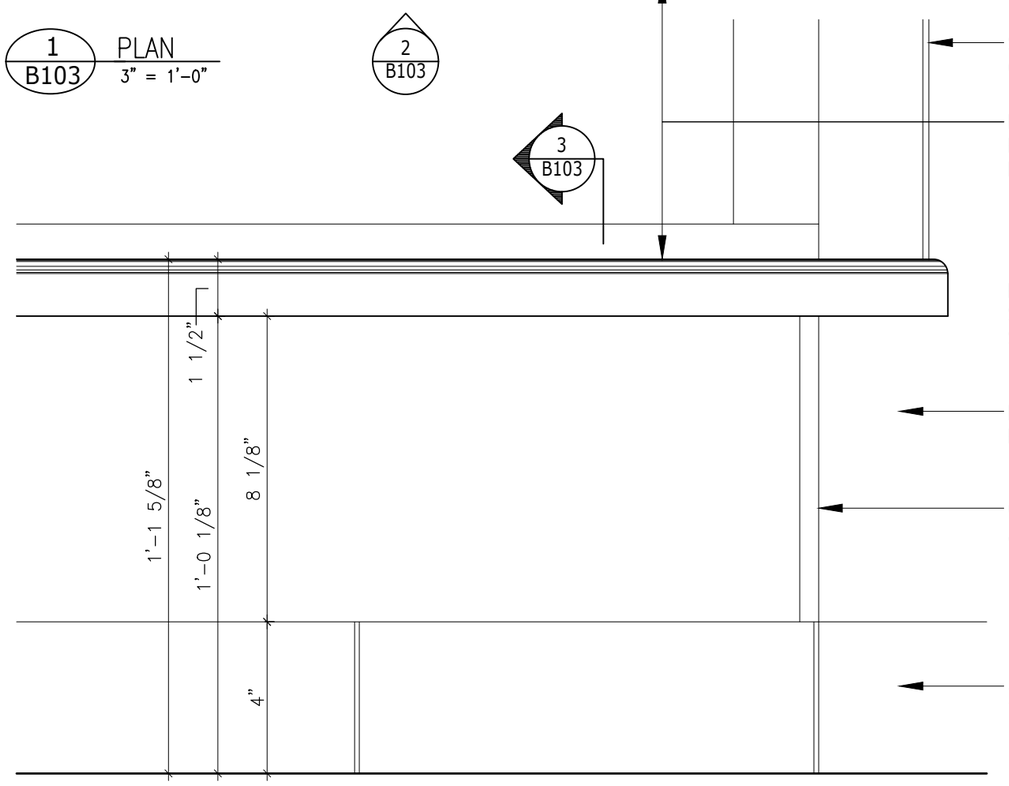

2 B103 ELEVATION
3" = 1'-0"

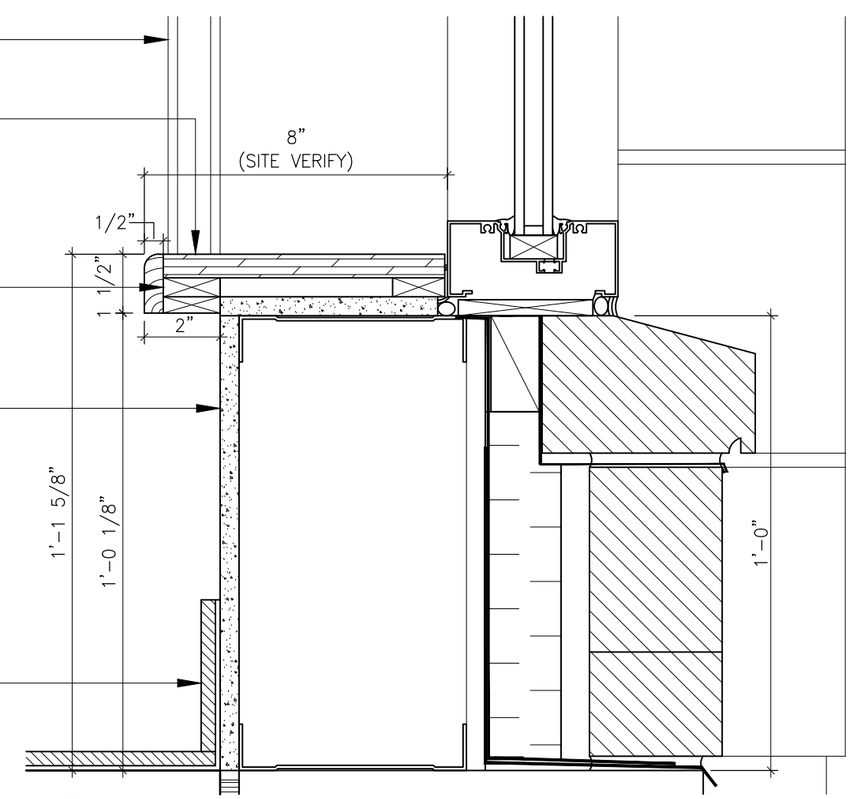

3 B103 SECTION
3" = 1'-0"

LCBO	B100 CHECK-OUT AREA/VESTIBULE	REVISION DATE	REV.	1 of 1	ISSUE DATE	STORE TYPE	STORE #
	WINDOW SILL DETAIL	2019 NOV	01	B103	2019 NOV		312

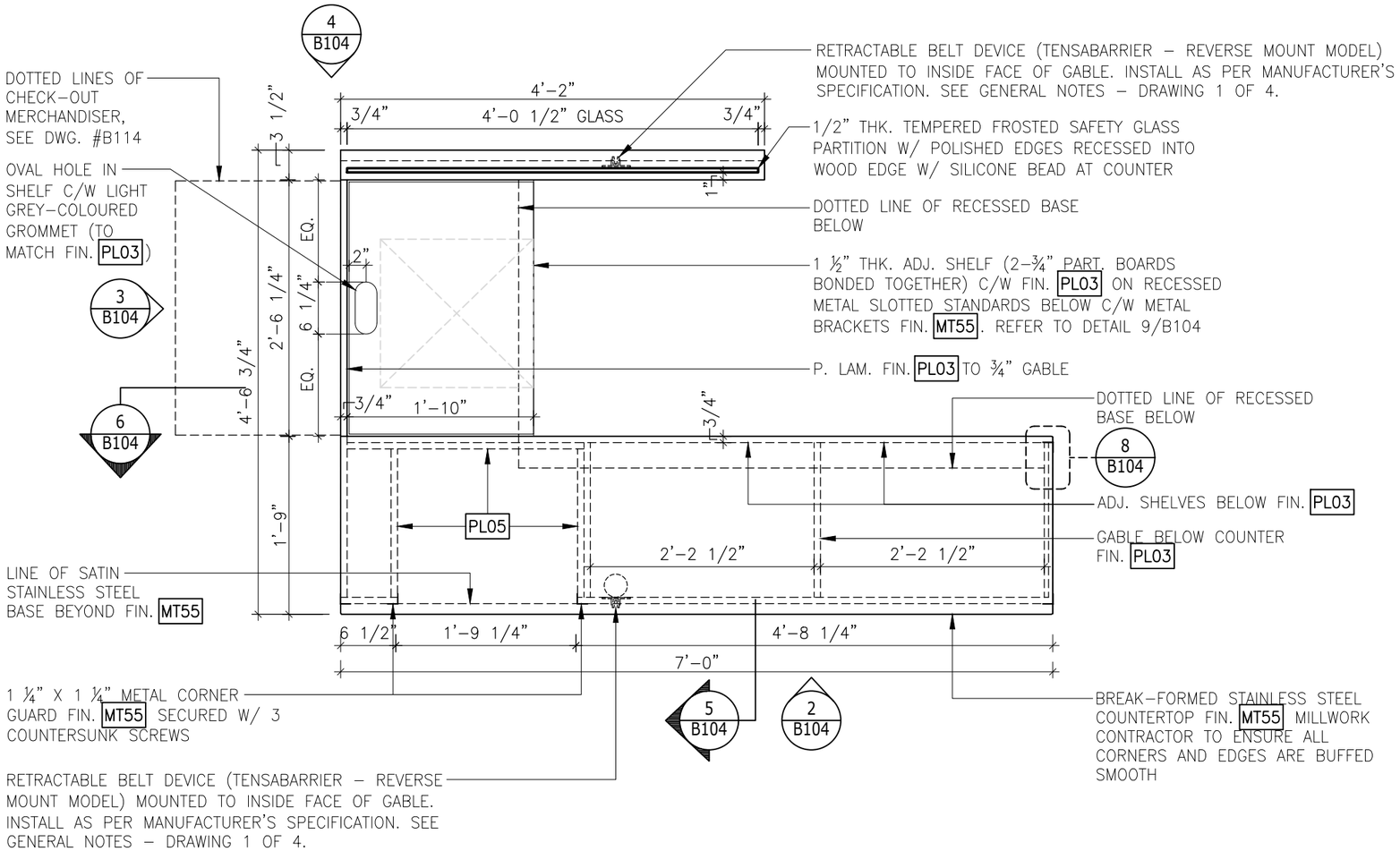

SHOPPING BASKETS
BY CART SOURCE
MODEL: PHB32
SIZE: 20" L. x 13.5" W. x 10" H.

1 B104 PLAN
3/4" = 1'-0"

GENERAL NOTES:

–BASE & STRUCTURAL COMPONENTS TO BE 3/4" PLYWOOD CONSTRUCTION WITH DESIGNATED FINISH.

–DRAWERS TO BE CONSTRUCTED OF SOLID 1/2" BALTIC BIRCH W/ CLEAR LACQUER FINISH.

–ALL OTHER CONSTRUCTION TO BE 3/4" PARTICLE BOARD WITH DESIGNATED FINISH UNLESS NOTED OTHERWISE.

–ALL EDGES & CORNERS OF SATIN STAINLESS STEEL COUNTERTOP TO BE WELDED AND BUFFED SMOOTH.

–ALL SCREWS IN METAL CORNER GUARDS TO MATCH FINISH OF CORNER GUARD/TRIM AND BE COUNTERSUNK. ALL SHARP EDGES TO BE MADE SMOOTH TO ENSURE SAFETY OF CUSTOMERS AND STAFF.

– MILLWORK CONTRACTOR TO SUPPLY AND INSTALL TENSABARRIER DEVICE AT SIDE OF CASH/CHECK OUT DESK. MILLWORK CONTRACTOR TO SUPPLY AND INSTALL TENSABARRIER AS PER MANUFACTURERS SPECIFICATIONS AND LCBO SPECIFICATION – 10 90 00. MILLWORK CONTRACTOR TO PROVIDE CUT OUT AT GABLE AND MOUNT HARDWARE AS PER SPECIFICATIONS. MILLWORK CONTRACTOR WILL ASSUME RESPONSIBILITY FOR CUT OUT SIZE AND LOCATION. MILLWORK CONTRACTOR TO INDICATE PROPOSED DETAILS/CUT OUT LOCATION ON SHOP DRAWING SUBMITTAL FOR FINAL APPROVAL PRIOR TO FABRICATION

– NO VISIBLE P. LAM. SEAMS PERMITTED.

LCBO	B100 CHECK-OUT AREA/VESTIBULE	REVISION DATE	REV.	1 OF 5	ISSUE DATE	STORE TYPE	STORE #
	CASH/CHECK-OUT DESK W/ GLASS DIVIDER PANEL & BASKET WELL	2019 NOV	01	B104	2019 NOV		312

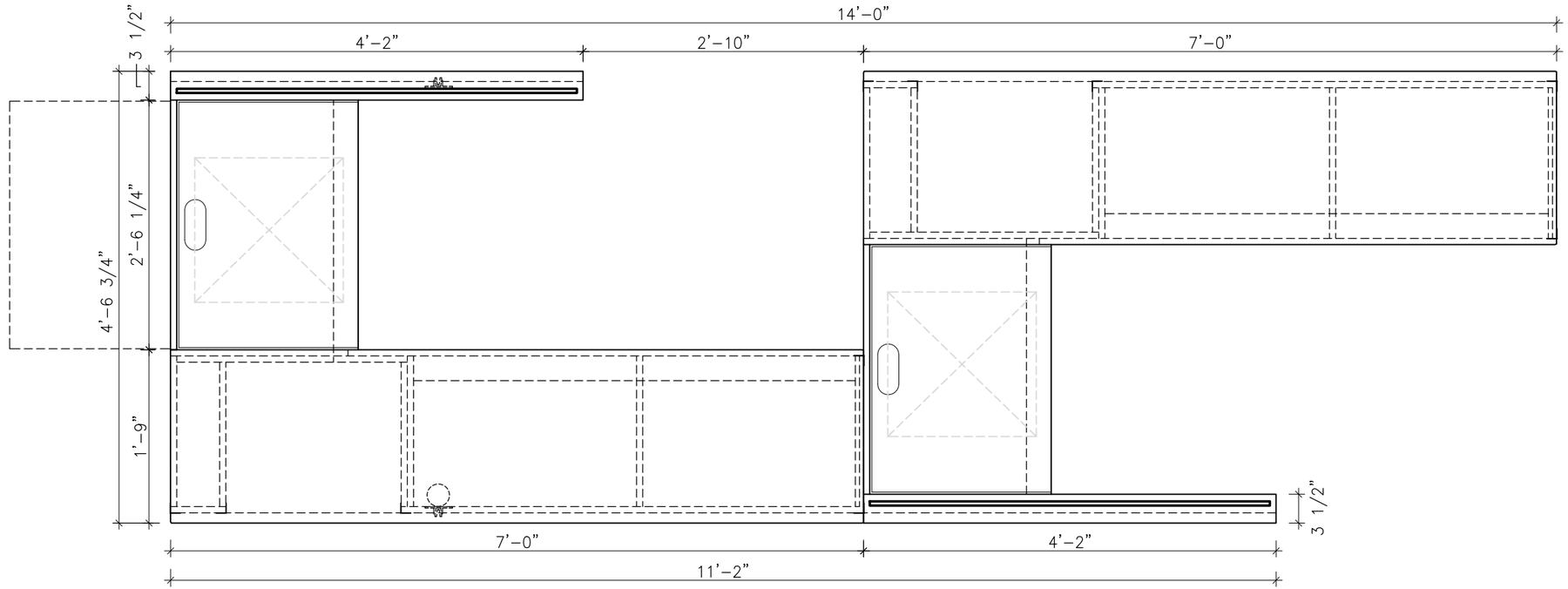

1A / B104 PLAN – (INLINE CONDITION)
3/4" = 1'-0"

1B / F104

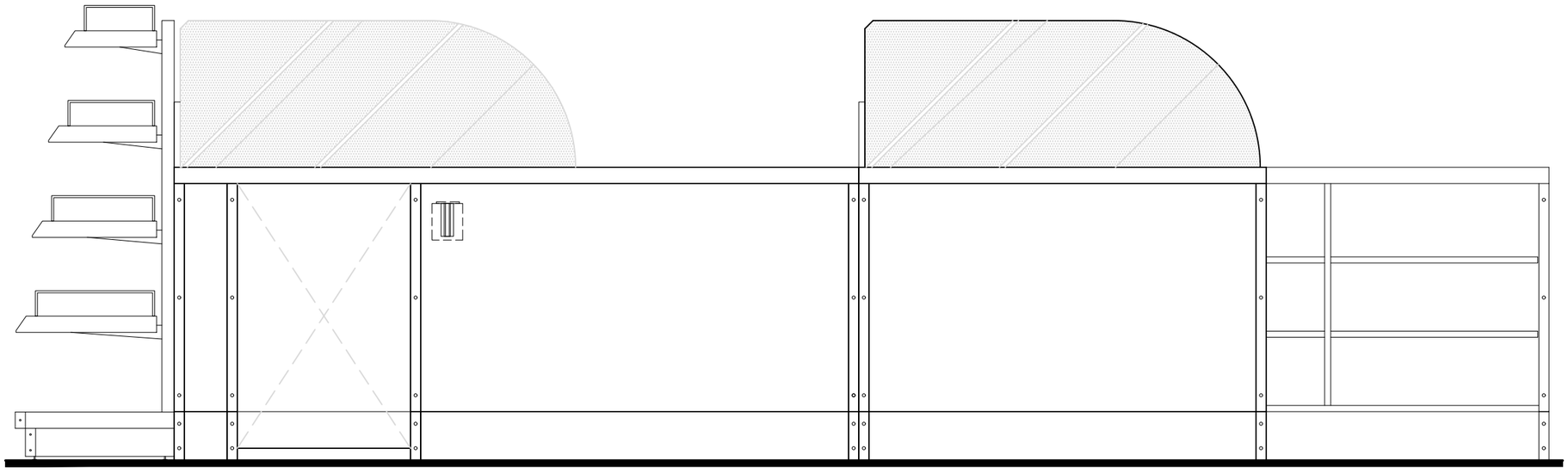

1B / B104 ELEVATION – (INLINE CONDITION)
3/4" = 1'-0"

LCBO	B100 CHECK-OUT AREA/VESTIBULE	REVISION DATE	REV.	2 OF 5	ISSUE DATE	STORE TYPE	STORE #
	CASH/CHECK-OUT DESK W/ GLASS DIVIDER PANEL & BASKET WELL	2019 NOV	01	B104	2019 NOV		312

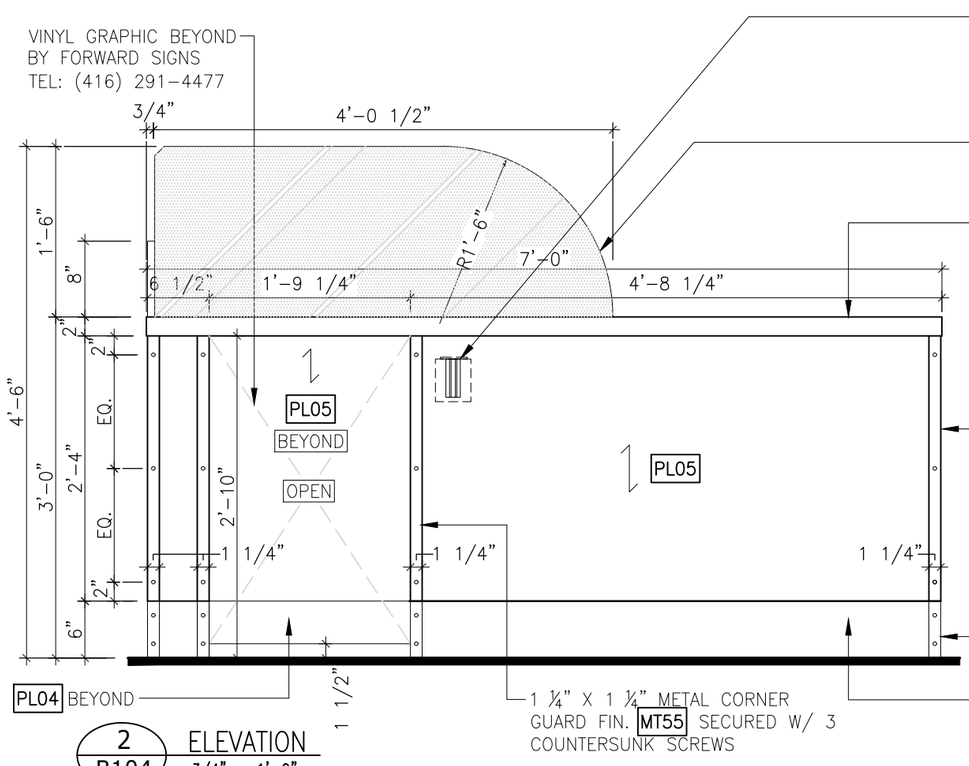

RETRACTABLE BELT DEVICE (TENSABARRIER – REVERSE MOUNT MODEL) MOUNTED TO INSIDE FACE OF GABLE. INSTALL AS PER MANUFACTURER'S SPECIFICATION. SEE GENERAL NOTES – DRAWING 1 OF 4.

1/2" THK. TEMPERED FROSTED SAFETY GLASS PARTITION W/ POLISHED EDGES RECESSED INTO WOOD EDGE W/ SILICONE BEAD AT COUNTER

BREAK–FORMED STAINLESS STEEL COUNTERTOP FIN. MT55 MILLWORK CONTRACTOR TO ENSURE ALL CORNERS AND EDGES ARE BUFFED SMOOTH

DIRECTION OF WOOD GRAIN TO RUN VERTICALLY (TYPICAL)

1 ¼" X 1 ¼" METAL CORNER GUARD FIN. MT55 SECURED W/ 3 COUNTERSUNK SCREWS

RETRACTABLE BELT DEVICE (TENSABARRIER – REVERSE MOUNT MODEL) MOUNTED TO INSIDE FACE OF GABLE. INSTALL AS PER MANUFACTURER'S SPECIFICATION. SEE GENERAL NOTES – DRAWING 1 OF 4.

1 ¼" X 1 ¼" METAL CORNER GUARD FIN. MT55 SECURED W/ 2 COUNTERSUNK SCREWS

1 ¼" X 1 ¼" METAL CORNER GUARD FIN. MT55 SECURED W/ 3 COUNTERSUNK SCREWS

FIN. PL04 TO RECESSED BASE

2 B104 ELEVATION
3/4" = 1'-0"

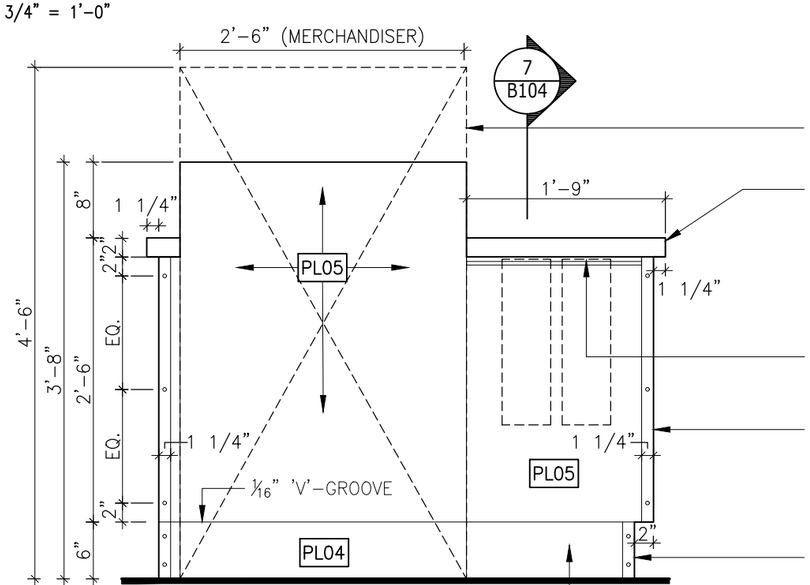

1/2" THK. TEMPERED FROSTED SAFETY GLASS PARTITION W/ POLISHED EDGES RECESSED INTO WOOD EDGE W/ SILICONE BEAD AT COUNTER

DOTTED LINES OF CHECK–OUT MERCHANDISER, SEE DWG. #B114

BREAK–FORMED STAINLESS STEEL COUNTERTOP FIN. MT55 MILLWORK CONTRACTOR TO ENSURE ALL CORNERS AND EDGES ARE BUFFED SMOOTH

NO VISIBLE P. LAM. SEAMS PERMITTED

RECESSED CHANNEL FIN. MT55, SEE DETAIL 7/B104

1 ¼" X 1 ¼" METAL CORNER GUARD FIN. MT55 SECURED W/ 3 COUNTERSUNK SCREWS

1 ¼" X 1 ¼" METAL CORNER GUARD FIN. MT55 SECURED W/ 2 COUNTERSUNK SCREWS

FIN. PL04 TO RECESSED BASE

3 B104 ELEVATION
3/4" = 1'-0"

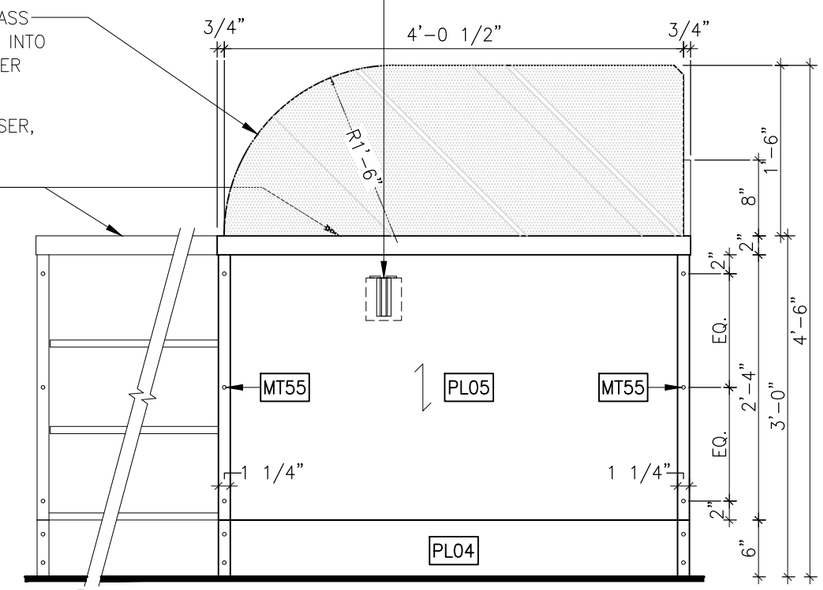

4 B104 ELEVATION
3/4" = 1'-0"

LCBO	B100 CHECK-OUT AREA/VESTIBULE	REVISION DATE	REV.	3 OF 5	ISSUE DATE	STORE TYPE	STORE #
	CASH/CHECK-OUT DESK W/ GLASS DIVIDER PANEL & BASKET WELL	2019 NOV	01	B104	2019 NOV		312

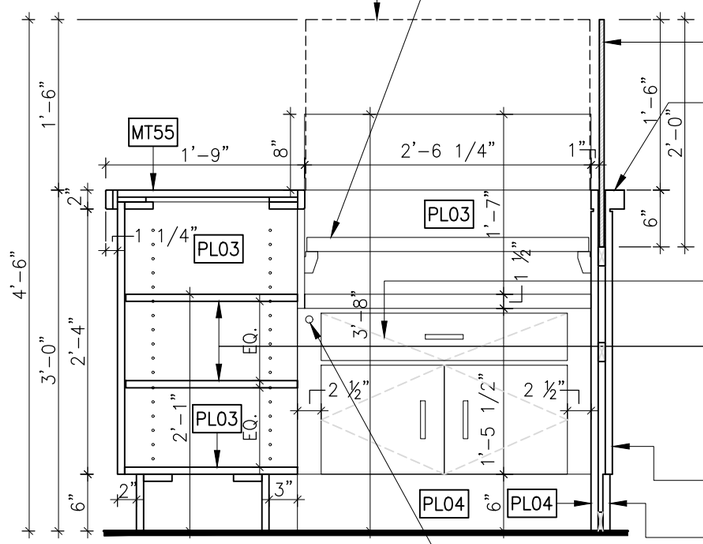

1 ½" THK. ADJ. SHELF (2-¾" PART. BOARDS BONDED TOGETHER) C/W FIN. PL03 ON RECESSED METAL SLOTTED STANDARDS BELOW C/W METAL BRACKETS FIN. MT55 REFER TO DETAIL 9/B104A. **NOTE: ADJUSTABLE CASH SHELF TO BE INSTALLED AT LOWEST LEVEL**

1/2" THK. TEMPERED FROSTED SAFETY GLASS PARTITION W/ POLISHED EDGES RECESSED INTO WOOD EDGE W/ SILICONE BEAD AT COUNTER

BREAK-FORMED STAINLESS STEEL COUNTERTOP FIN. MT55 MILLWORK CONTRACTOR TO ENSURE ALL CORNERS AND EDGES ARE BUFFED SMOOTH

NO VISIBLE P. LAM. SEAMS PERMITTED

ONE DRAWER FIN. PL03 NO LOCKS ON FULL EXT. SLIDES W/ STOPS (TYPICAL)

3/4" THICK ADJ. PART. BOARD SHELF W/ P. LAM. FIN. PL03 ON RECESSED PILASTER STRIPS C/W SHELF CLIPS FIN. MT55

P. LAM. FIN. PL05

RECESSED BASE FIN. PL04

PUSH BUTTON LOCATION TO BE CONFIRMED BY LCBO

5 / B104 SECTIONAL-ELEVATION
3/4" = 1'-0"

NOTE: DOOR PULLS BY RICHELIEU
TEL: (905) 890-4920
REF. NO: #33 205-195
FINISH: MAT NICKEL

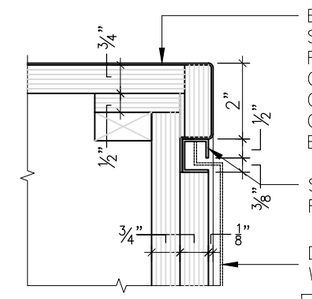

BREAK-FORMED SATIN STAINLESS STEEL COUNTERTOP FIN. MT55 WITH WELDED CORNERS. MILLWORK CONTRACTOR TO ENSURE ALL CORNERS AND EDGES ARE BUFFED SMOOTH

STEEL CHANNEL DETAIL FIN. MT55

DOTTED LINES OF GIFT BAG WIREFRAME SUPPLIED BY LCBO

MILLWORK CONTRACTOR TO OBTAIN SAMPLE OF WIREFRAME GIFT BAG PRIOR TO CONSTRUCTION

7 / B104 DETAIL
3" = 1'-0"

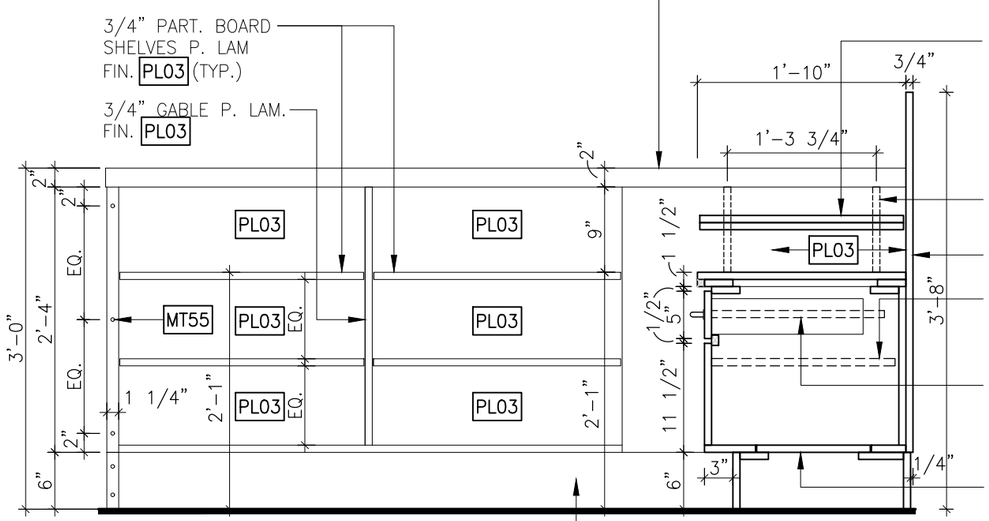

BREAK-FORMED STAINLESS STEEL COUNTERTOP FIN. MT55 MILLWORK CONTRACTOR TO ENSURE ALL CORNERS AND EDGES ARE BUFFED SMOOTH

1 ½" THK. ADJ. SHELF (2-¾" PART. BOARDS BONDED TOGETHER) C/W FIN. PL03 ON RECESSED METAL SLOTTED STANDARDS BELOW C/W METAL BRACKETS FIN. MT55 REFER TO DETAIL 9/B104. **NOTE: ADJUSTABLE CASH SHELF TO BE INSTALLED AT LOWEST LEVEL**

RECESSED SLOTTED STANDARDS FIN. MT55

P. LAM. FIN. PL05

CONTINUATION OF SHELF BEHIND C.R. COUNTER

DRAWER ON FULL EXTENSION SLIDES C/W STOPS

CUT 12" X 12" ACCESS PANEL IN BOTTOM SHELF C/W 1" DIA. CUT OUT IN CORNER

RECESSED BASE FIN. PL04

6 / B104 SECTIONAL-ELEVATION
3/4" = 1'-0"

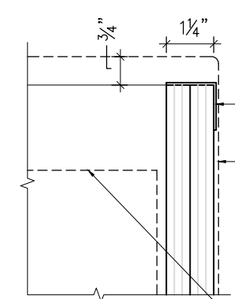

1 ¼" X 1 ¼" METAL CORNER GUARD FIN. MT55 SECURED W/ 3 COUNTERSUNK SCREWS

DOTTED LINES OF BREAK-FORMED STAINLESS STEEL COUNTERTOP ABOVE FIN. MT55 MILLWORK CONTRACTOR TO ENSURE ALL CORNERS AND EDGES ARE BUFFED SMOOTH

DOTTED LINES OF 3/4" PART. BOARD SHELF P. LAM. FIN. PL03 (TYP.)

8 / B104 DETAIL
3" = 1'-0"

LCBO	B100 CHECK-OUT AREA/VESTIBULE	REVISION DATE	REV.	4 OF 5	ISSUE DATE	STORE TYPE	STORE #
	CASH/CHECK-OUT DESK W/ GLASS DIVIDER PANEL & BASKET WELL	2019 NOV	01	B104	2019 NOV		312

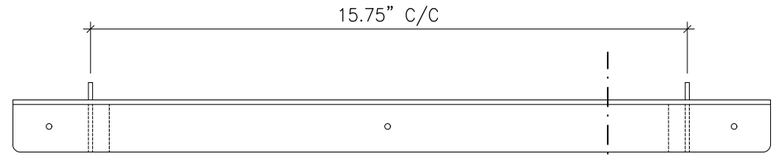

9 B104 PLAN VIEW
3" = 1'-0"

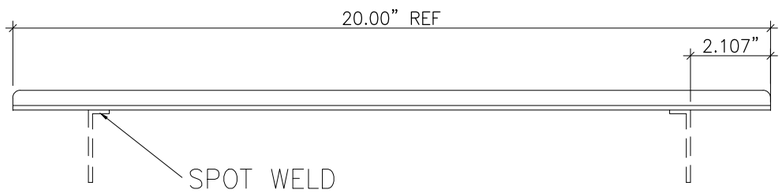

10 B104 ELEVATION
3" = 1'-0"

NOTE:
BRACKET / ANGLE FIN. MT55

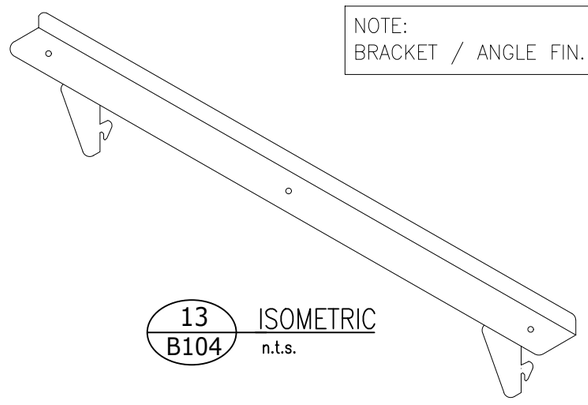

13 B104 ISOMETRIC
n.t.s.

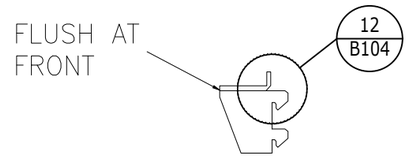

11 B104 SECTION
3" = 1'-0"

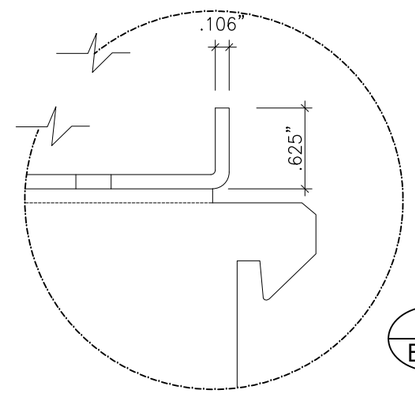

12 B104 DETAIL
n.t.s.

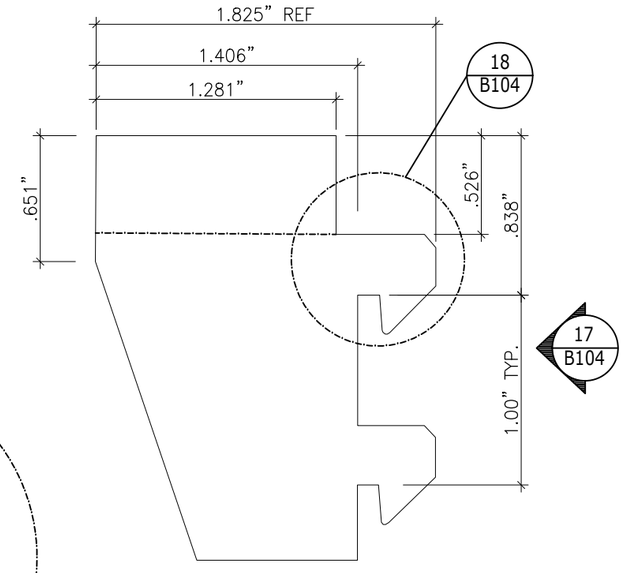

16 B104 ELEVATION – SHELF BRACKET
n.t.s.

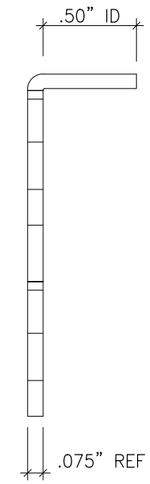

17 B104 ELEVATION
n.t.s.

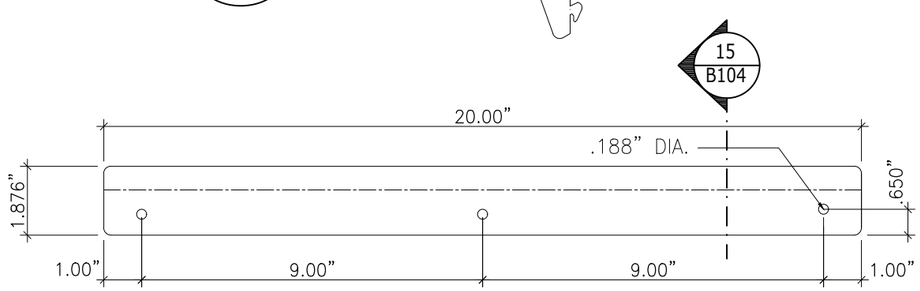

14 B104 ELEVATION – SHELF ANGLE
3" = 1'-0"

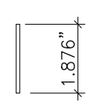

15 B104 SECTION
3" = 1'-0"

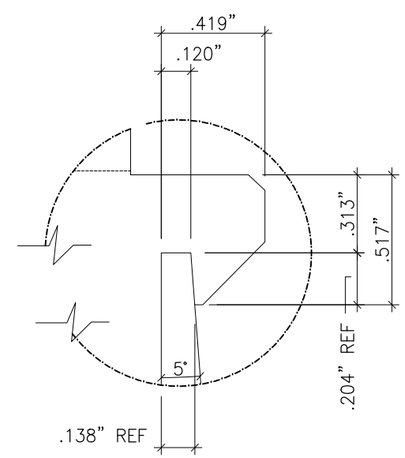

EQUIVALENT OF 1/2" SYSTEM HOOK

18 B104 DETAIL
n.t.s.

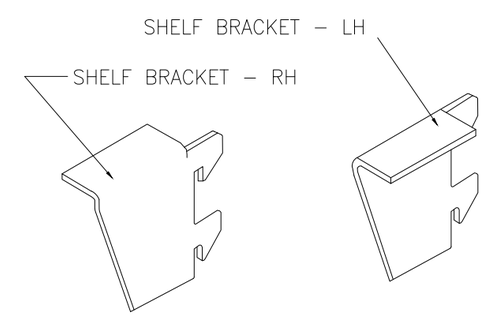

19 B104 ISOMETRIC VIEWS
n.t.s.

NOTE:
CASH REGISTER WEIGHT IS BETWEEN 60 LBS AND 80 LBS TOTAL.
FIXTURE CONTRACTOR TO ENSURE SHELF ANGLE/BRACKET PROVIDES SUFFICIENT SUPPORT AND STABILITY

LCBO	B100 CHECK-OUT AREA/VESTIBULE	REVISION DATE	REV.	5 OF 5	ISSUE DATE	STORE TYPE	STORE #
	CASH/CHECK-OUT DESK W/ GLASS DIVIDER PANEL & BASKET WELL	2019 NOV	01	B104	2019 NOV		312

NOTE:
ALL SOLID WOOD GRADE TO BE FAS

NOTE:
MERCHANDISER TO BE SECURED TO CASH DESK USING THRU–BOLTS (CONCEALED). MILLWORK CONTRACTOR TO ENSURE STABILITY AND CONCEAL ATTACHMENT.

ENSURE NO SHARP EDGES ON METAL WORK – FILE SMOOTH AS REQ'D.

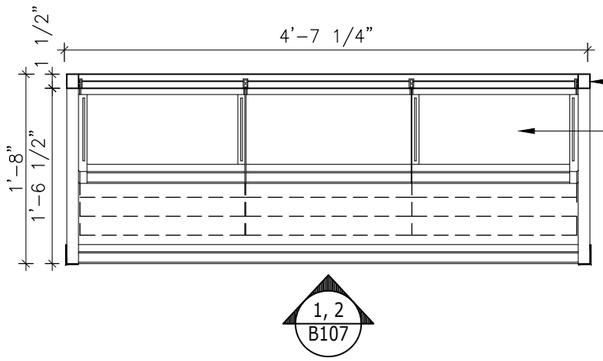

5 B107 PLAN –MERCHANDISER
3/4" = 1'–0"

1 ½" x 1 ¼" HARDWOOD EDGE FIN. WD29

1/2" SLATWALL REVEAL FIN. PT16
SEE DETAIL 6, DWG. B107

TYP. 200ml BOTTLE SHELF WITH WOOD MOULDINGS FINISH WD29 & PLASTIC LAMINATE SHELF PL04 C/W 1/4" SQUARE RAILS FINISH PT16 ON HEAVY–DUTY METAL BRACKETS & STANDARDS. MILLWORK CONTRACTOR TO ENSURE ALL SHELF WIDTHS ARE EQUAL & ARE COORDINATED WITH RECESSED METAL STANDARDS SPACING

P. LAM. FIN. PL04 TO BACK PANEL

HARDWOOD EDGE FIN. WD29

FIN. PL04

P. LAM. FIN. PL04

1 ¼" x 1 ¼" x 1 ½" METAL, CORNER GUARD FIN. MT55 TO BE FLUSH W/ WOOD FINISH, FIN. WD29, SCREW IN PLACE. SCREWS TO BE COUNTERSUNK

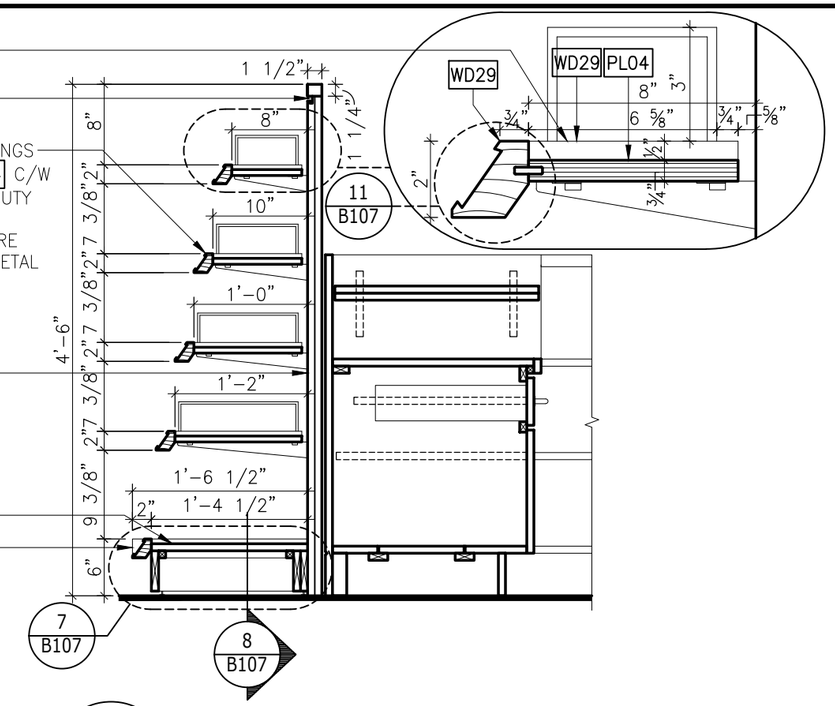

3 B107 SECTION
3/4" = 1'–0"

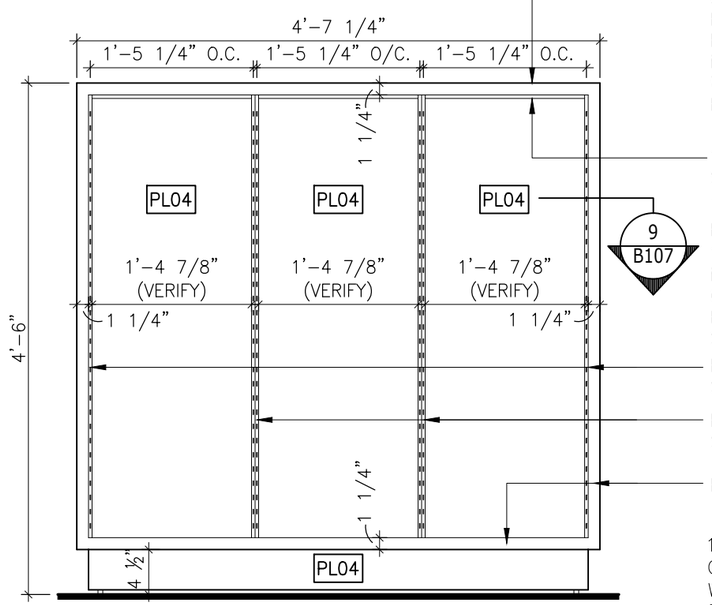

1 B107 ELEVATION (W/O SHELVES)
3/4" = 1'–0"

HARDWOOD EDGE FIN. WD29

ACCESSORIES TRAY SHELF W/ WOOD MOULDINGS FIN. WD29 & P. LAM SHELF FIN. PL04 ON HEAVY–DUTY METAL BRACKETS & STANDARDS. MILLWORK CONTRACTOR TO ENSURE ALL SHELF WIDTHS ARE EQUAL & ARE COORDINATED WITH RECESSED METAL STANDARDS SPACING

1/2" SLATWALL REVEAL FIN. PT16
SEE DETAIL 6 B107

TYP. 200ml BOTTLE SHELF WITH WOOD MOULDINGS FINISH WD29 & PLASTIC LAMINATE SHELF PL04 C/W 1/4" SQUARE RAILS FINISH PT16 ON HEAVY–DUTY METAL BRACKETS & STANDARDS. MILLWORK CONTRACTOR TO ENSURE ALL SHELF WIDTHS ARE EQUAL & ARE COORDINATED WITH RECESSED METAL STANDARDS SPACING

HEAVY DUTY RECESSED METAL SINGLE–SLOTTED STANDARDS FIN. PT16

HEAVY DUTY RECESSED METAL SINGLE–SLOTTED STANDARDS x 2 FIN. PT16

HARDWOOD EDGE FIN. WD29

1 ¼" x 1 ¼" x 1 ½" METAL CORNER GUARD FIN. MT55 TO BE FLUSH W/ WOOD FINISH, FIN. WD29, SCREW IN PLACE. SCREWS TO BE COUNTERSUNK

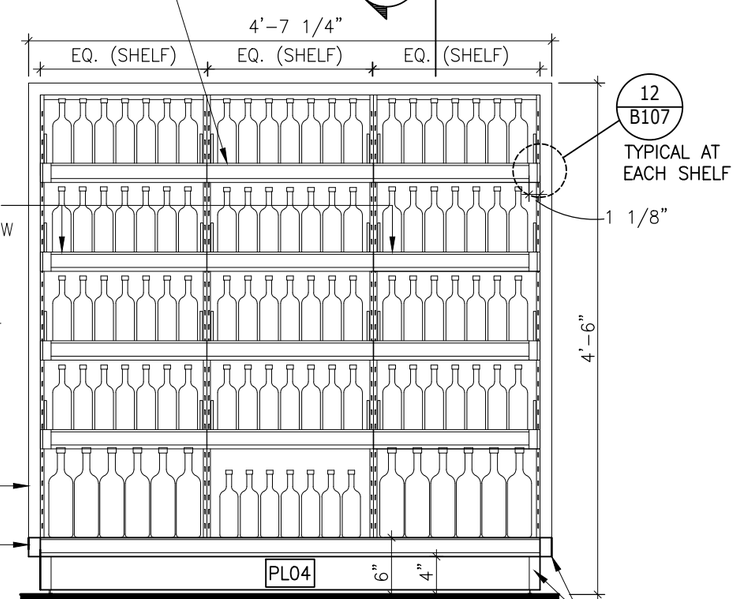

1 ¼" x 1 ¼"
METAL CORNER
GUARD FIN. MT55

2 B107 ELEVATION (W/ SHELVES)
3/4" = 1'–0"

LCBO	B100 CHECK-OUT AREA/VESTIBULE	REVISION DATE	REV.	1 of 2	ISSUE DATE	STORE TYPE	STORE #
	MERCHANDISER FOR U-SHAPED CASH DESK	2019 NOV	01	B107	2019 NOV		312

NOTE:
ALL SOLID WOOD GRADE TO BE FAS

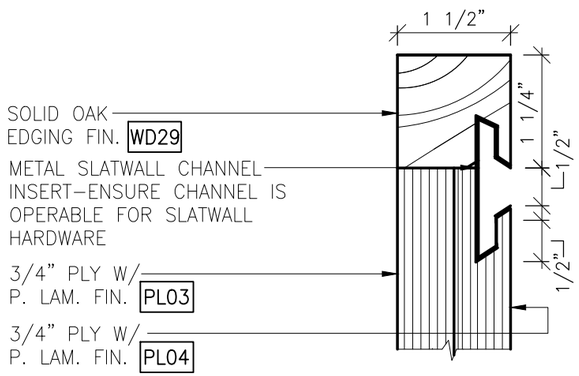

6 / B107 SECTION
6"=1'-0"

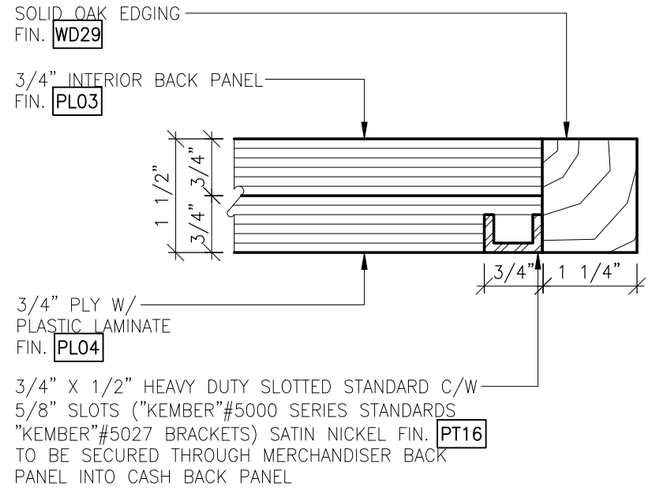

9 / B107 SECTION
6"=1'-0"

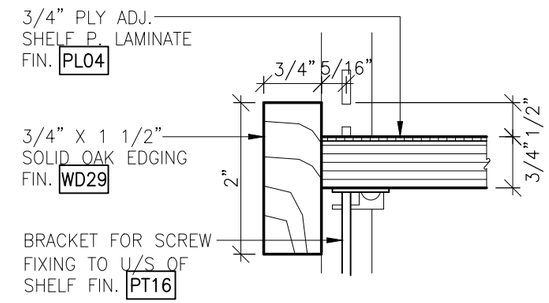

10 / B107 SECTION
6"=1'-0"

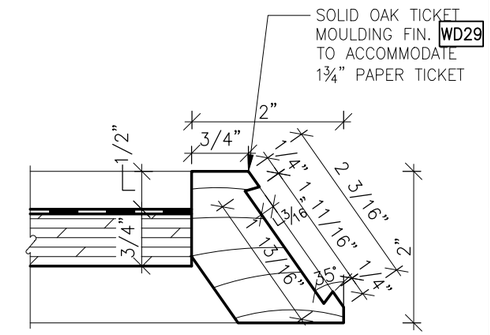

11 / B107 SECTION
6"=1'-0"

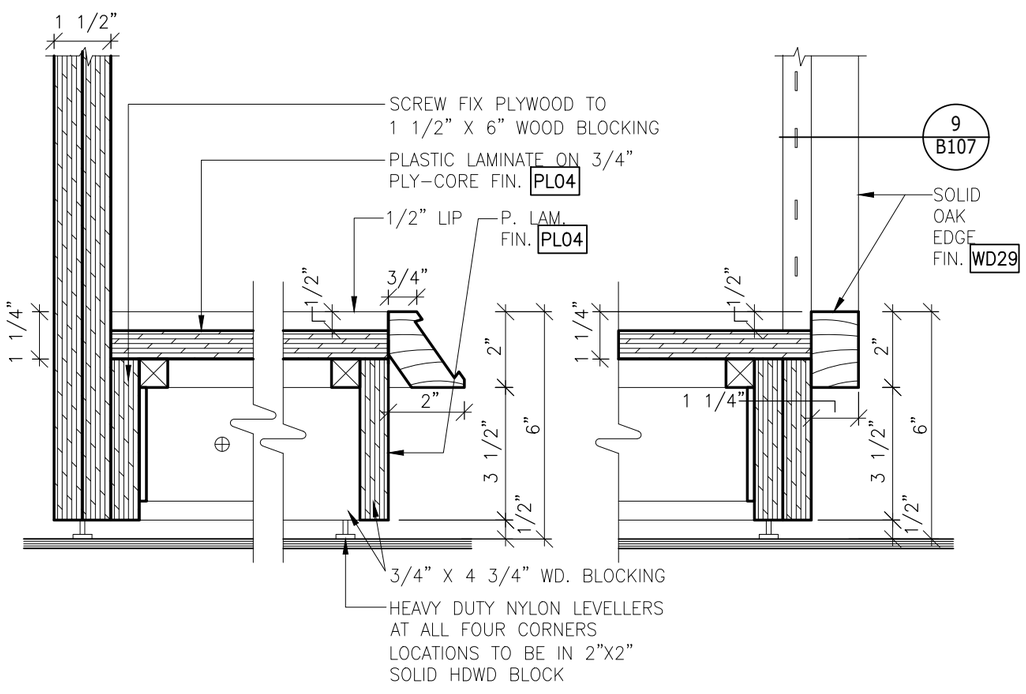

7 / B107 SECTION
3" = 1'-0"

8 / B107 SECTION
3" = 1'-0"

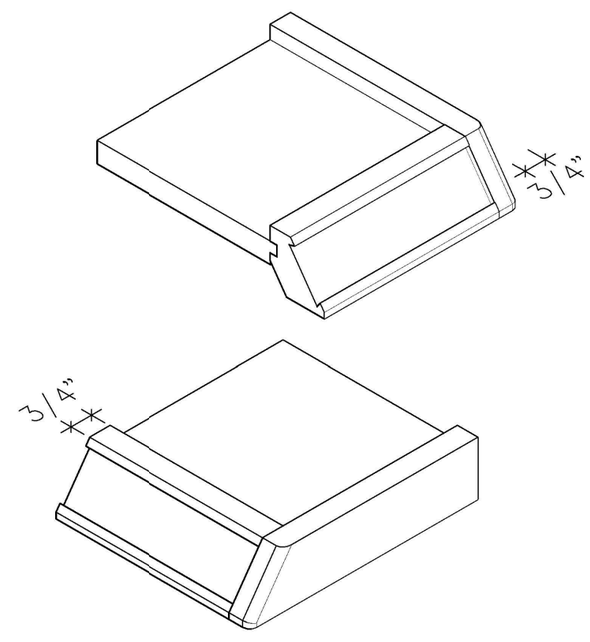

12 / B107 ISOMETRIC VIEWS – ANGLED WOOD BLOCK DETAIL
AT ANGLED TICKET MOULDING

LCBO	B100 CHECK-OUT AREA/VESTIBULE	REVISION DATE	REV.	2 of 2	ISSUE DATE	STORE TYPE	STORE #
	MERCHANDISER FOR U-SHAPED CASH DESK	2019 NOV	01	B107	2019 NOV		312

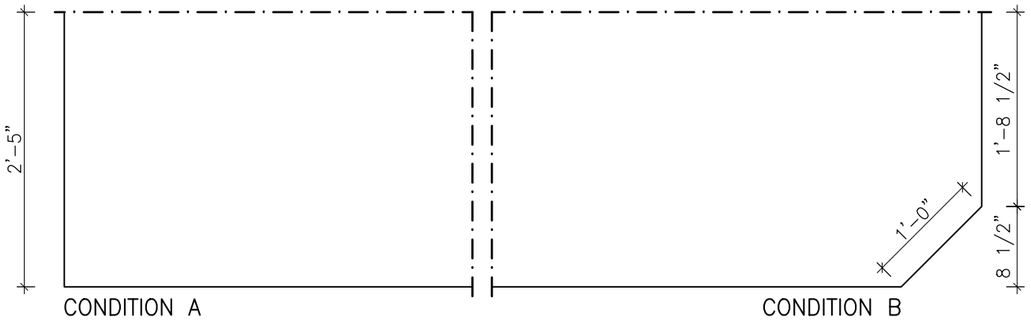

1 / B113 PLAN
3/4" = 1'-0"

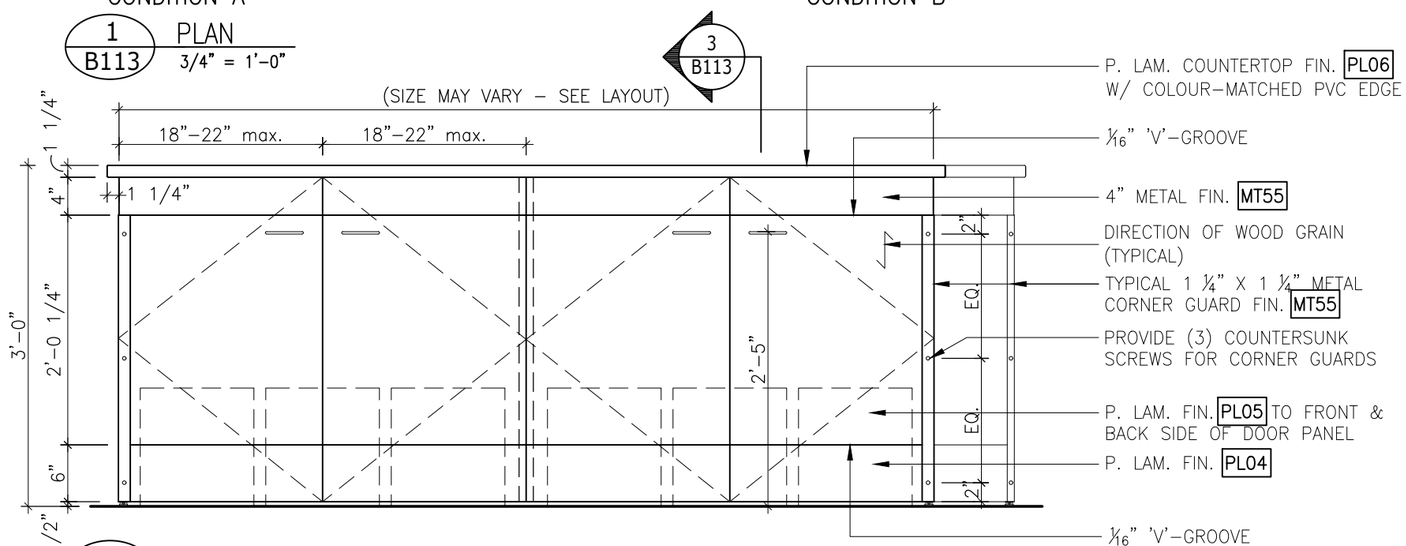

1 / B113 ELEVATION
3/4" = 1'-0"

NOTE:
PROVIDE (3) CONCEALED HEAVY DUTY EUROPEAN HINGES W/ **135° OPENING RADIUS** PER DOOR. HINGES BY BLUM OR APPROVED EQUAL

NOTES:
ALL COMPONENTS TO BE 3/4" PLYWOOD W/ DESIGNATED FINISH UNLESS OTHERWISE NOTED.

CO–ORDINATION REQUIRED BETWEEN G.C. AND THE MILLWORK CONTRACTOR TO ENSURE A SUFFICIENT AMOUNT OF CLEARANCE IS LEFT FOR ANY SHUTTER DEFLECTION AS THE SECURITY SHUTTER NEEDS TO BE LOWERED TO THE WINDOW SILL BEHIND THE BOX STORAGE UNIT FOR MAXIMUM SECURITY.

NO VISIBLE SEAMS PERMITTED IN PANELING OR DOORS. NUMBER OF SEAMS IN COUNTERTOP SHOULD BE KEPT TO MINIMUM (EVERY 8'–0") AND SHOULD ALIGN W/ DOOR SEAMS BELOW.

SIZE AND LAYOUT VARIES, PLEASE REFER TO FIXTURE PLAN. IF CHAMFERED CORNERS ARE REQUIRED, CHAMFERED CORNER TO BE 12".

NOTE:
DOOR PULLS BY RICHELIEU
TEL: 1 (800) 361–6000
REF. NO: #33205–195
FINISH: BRUSHED NICKEL

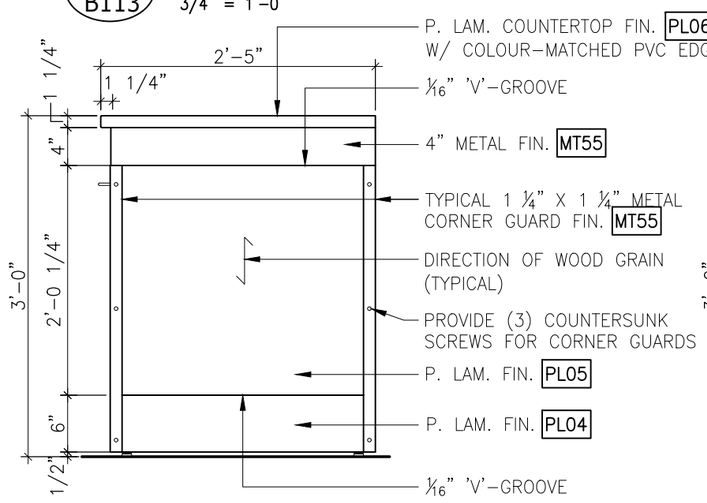

2 / B113 ELEVATION
3/4" = 1'-0"

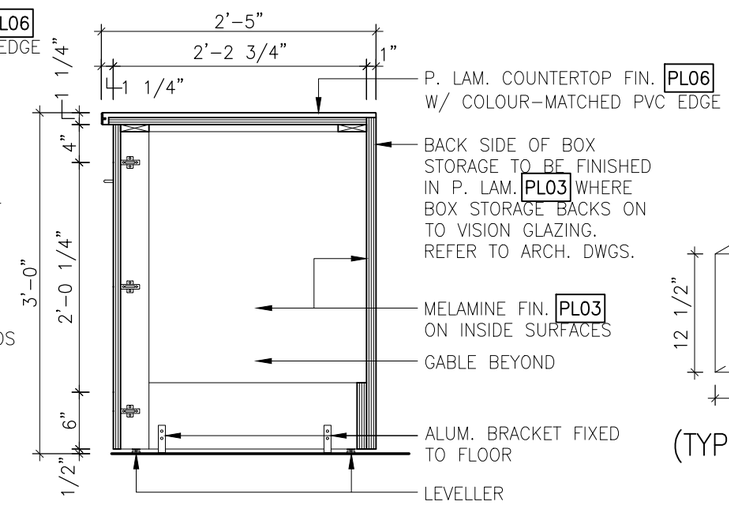

3 / B113 SECTION
3/4" = 1'-0"

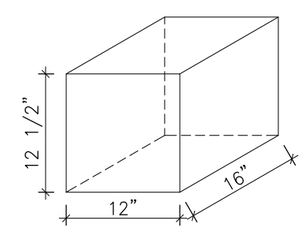

(TYPICAL BOX SIZE)

LCBO	B100 CHECK-OUT AREA/VESTIBULE	REVISION DATE	REV.	1 of 1	ISSUE DATE	STORE TYPE	STORE #
	BOX STORAGE	2019 NOV	01	B113	2019 NOV		312

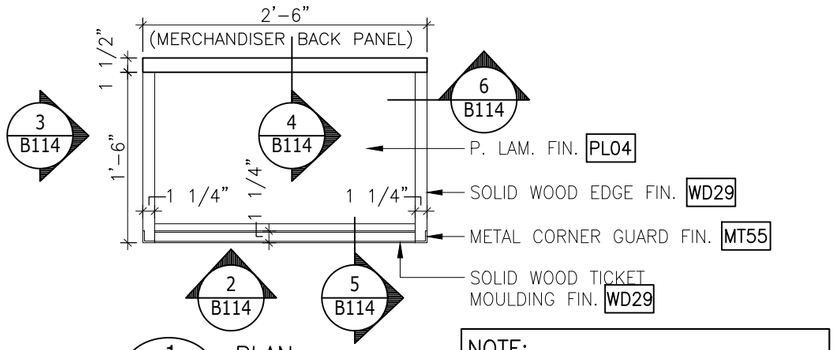

1 B114 PLAN
3/4" = 1'-0"

NOTE:
SOLID WOOD GRADE TO BE FAS

NOTE:
MERCHANDISER TO BE SECURED TO CASH DESK USING THRU-BOLTS (CONCEALED). MILLWORK CONTRACTOR TO ENSURE STABILITY AND CONCEAL ATTACHMENT

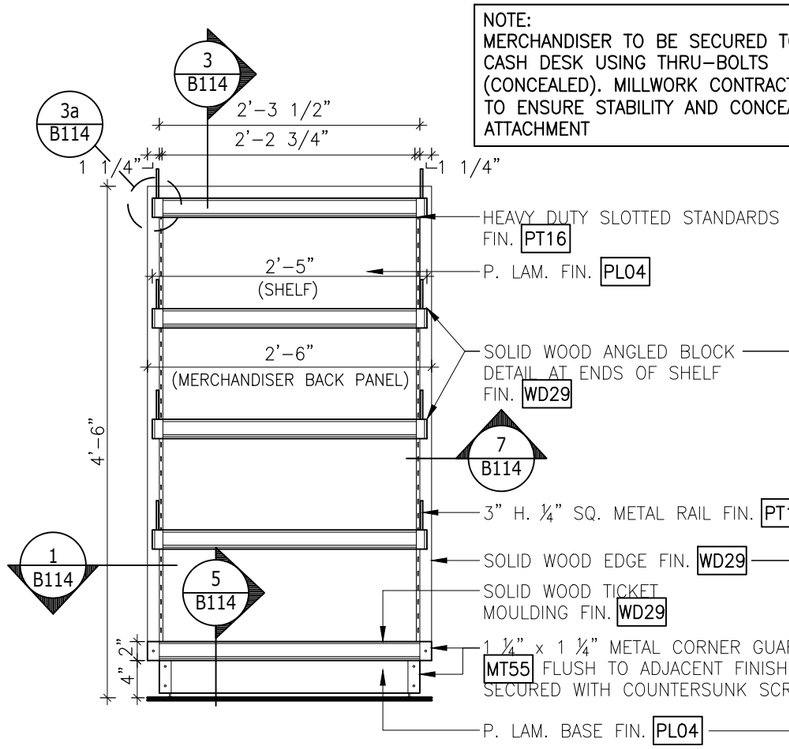

2 B114 ELEVATION
3/4" = 1'-0"

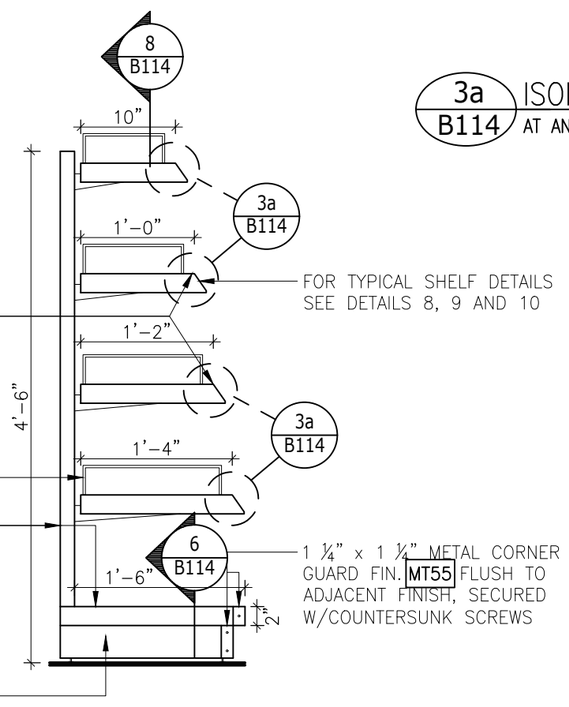

3 B114 ELEVATION
3/4" = 1'-0"

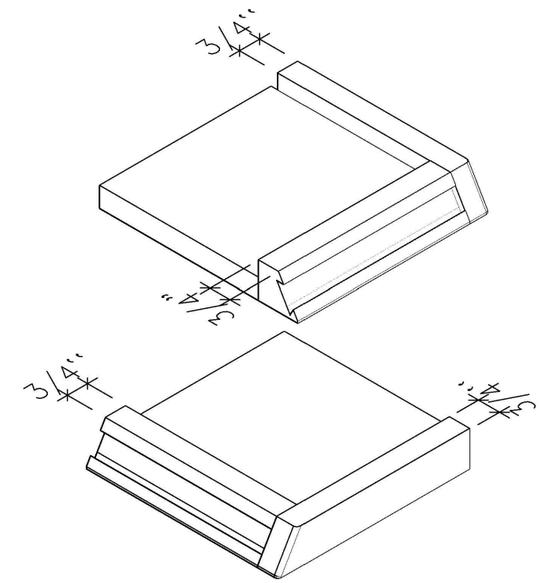

3a B114 ISOMETRIC VIEWS – ANGLED WOOD BLOCK DETAIL
AT ANGLED TICKET MOULDING

TYPE 2 MERCHANDISER GENERAL NOTES
PROVIDE : 3 TYPICAL SHELVES, SEE DETAILS 8, 9, 10 SLOTTED STANDARDS TO BE INSTALLED LEVEL AND ALIGNED WITH EACH OTHER TO ENSURE THAT SHELVES ARE LEVEL FINISHES FOR TYPE 2 MERCHANDISER TO BE AS PER THIS DRAWING, SEE DETAILS 4–10 FOR DETAILS

LCBO	B100 CHECK-OUT AREA/VESTIBULE	REVISION DATE	REV.	1 of 2	ISSUE DATE	STORE TYPE	STORE #
	TYPE 2 MERCHANDISER	2019 NOV	01	B114	2019 NOV		312

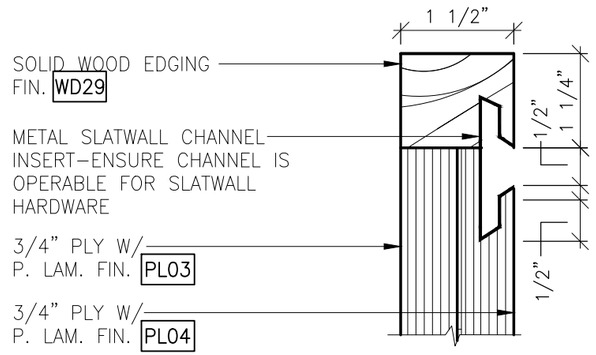

NOTE:
ALL SOLID WOOD
GRADE TO BE FAS

4 / B114 SECTION
6"=1'-0"

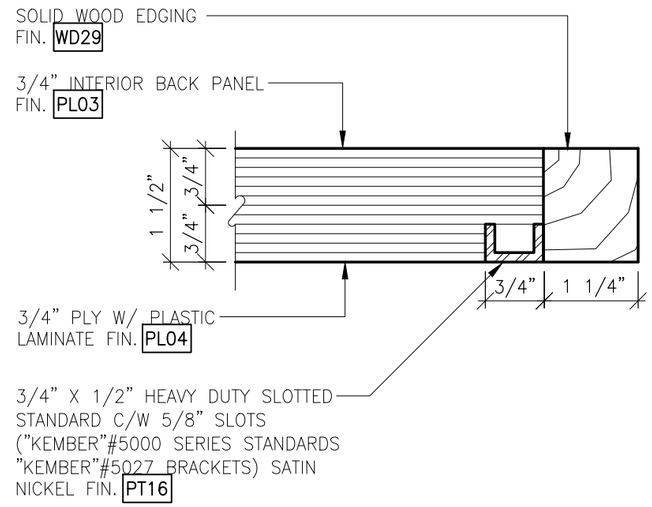

7 / B114 SECTION
6"=1'-0"

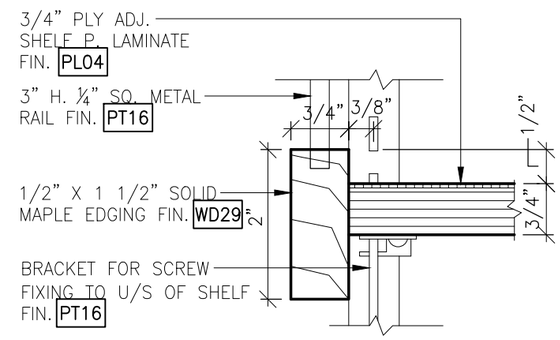

8 / B114 SECTION
6" = 1'-0"

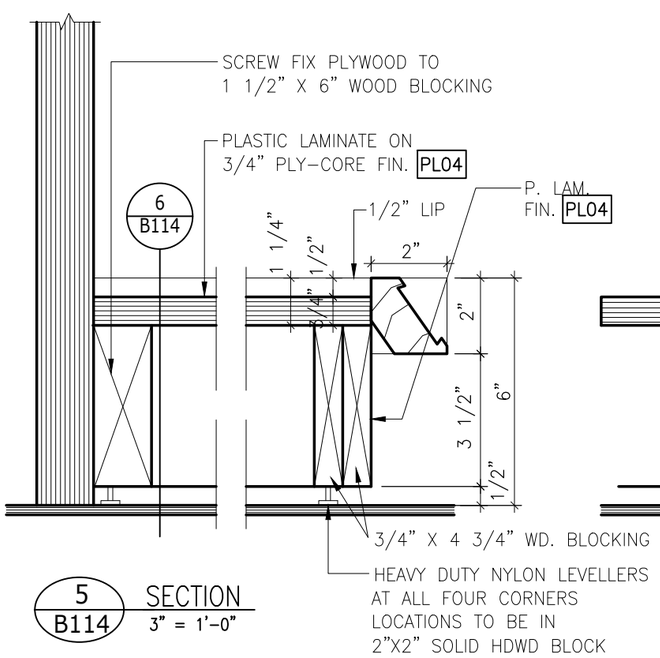

5 / B114 SECTION
3" = 1'-0"

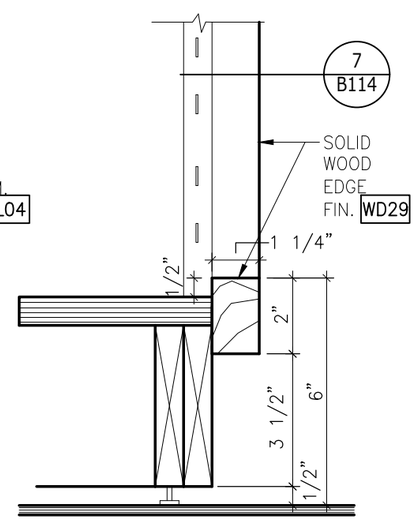

6 / B114 SECTION
3" = 1'-0"

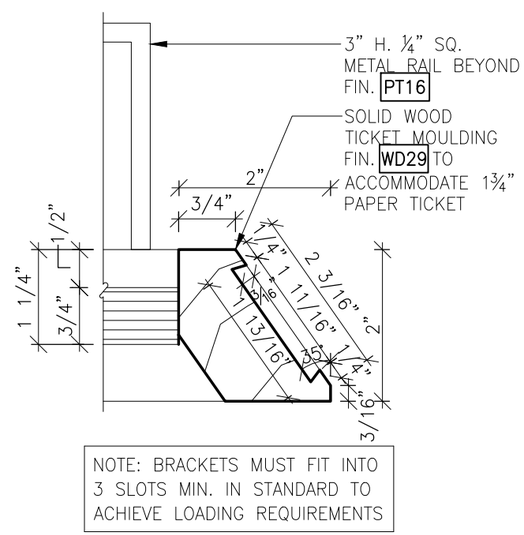

NOTE: BRACKETS MUST FIT INTO
3 SLOTS MIN. IN STANDARD TO
ACHIEVE LOADING REQUIREMENTS

9 / B114 SECTION
6"=1'-0"

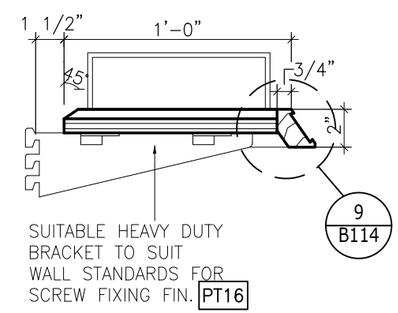

10 / B114 SECTION
1 1/2"=1'-0"

LCBO	B100 CHECK-OUT AREA/VESTIBULE	REVISION DATE	REV.	2 of 2	ISSUE DATE	STORE TYPE	STORE #
	TYPE 2 MERCHANDISER	2019 NOV	01	B114	2019 NOV		312

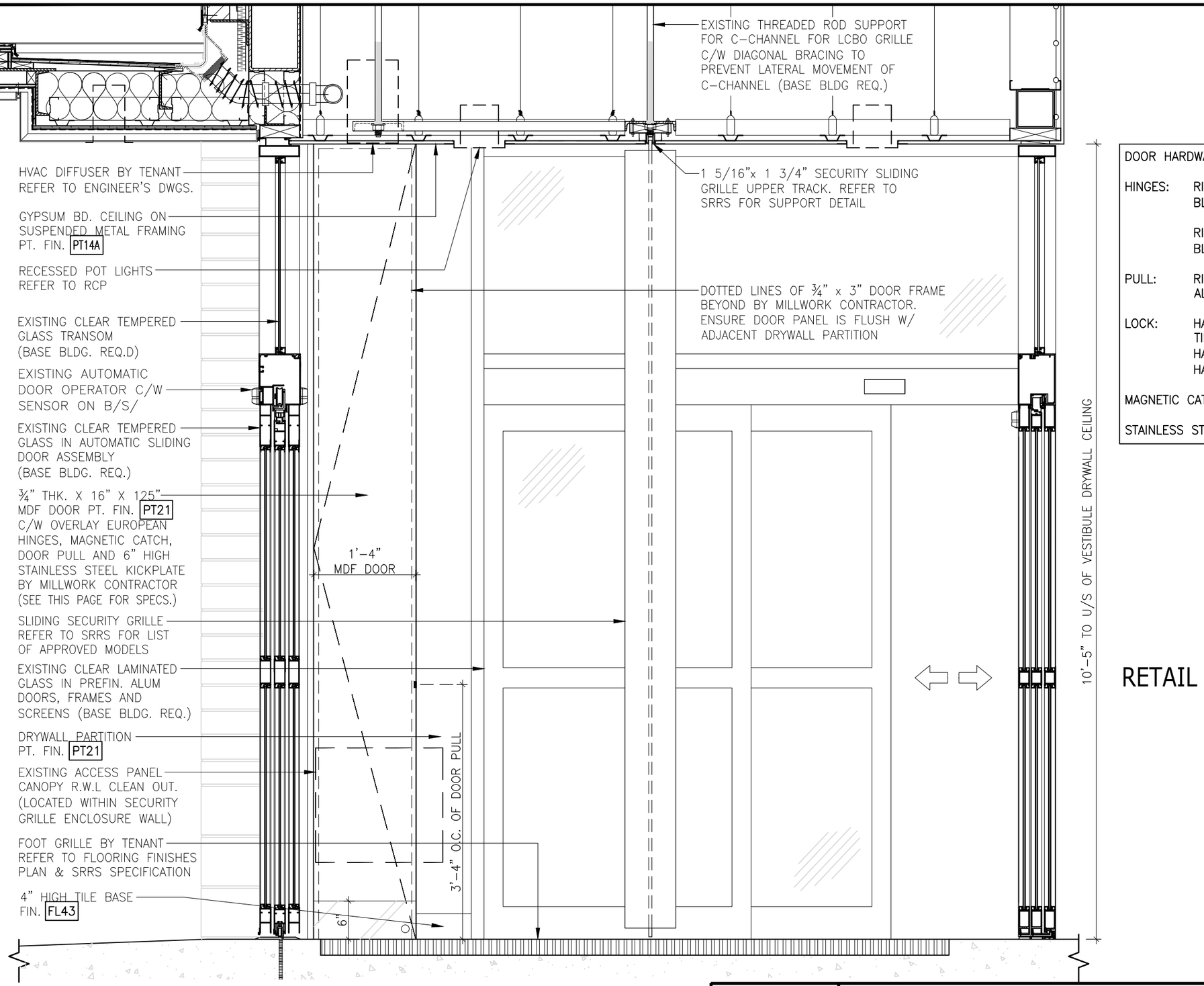

DOOR HARDWARE SPECIFICATIONS:

HINGES:	RICHELIEU #95M155180 BLUM HINGE (6 REQ'D.)
	RICHELIEU #193L810180 BLUM HINGE MOUNTING PLATE (6 REQ'D.)
PULL:	RICHELIEU #98982510 ALUMINUM EDGE MOUNT PULL
LOCK:	HAFELE #235.08.303 TIMBERLINE GRASS CAM LOCK HAFELE #210.04.606 LOCK BARREL HAFELE #210.04.062 LOCK CYLINDER ROSETTE
MAGNETIC CATCH:	RICHELIEU #BP52030 MAGNETIC CATCH
STAINLESS STEEL KICK PLATE:	WILSONART #6277

1 / B117 ELEVATION/SECTION
3/4" = 1'-0"

LCBO	B100 CHECK-OUT AREA/VESTIBULE	REVISION DATE	REV.	1 OF 1	ISSUE DATE	STORE TYPE	STORE #
	GRILLE ENCLOSURE POCKET DOOR PANEL DETAIL	2019 NOV	01	B117	2019 NOV		312

042-6792619

P-LAM AND FABRIC
COLOUR SPEC VARY
PER STORE FORMAT

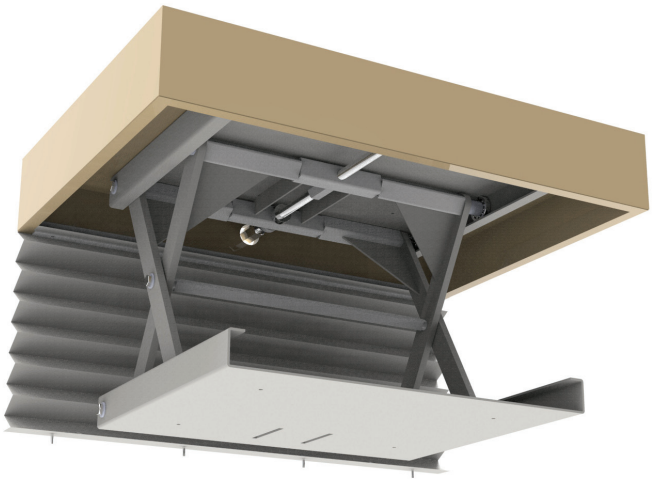

Vicstore FIXTURES

ISSED FOR PRODUCTION
AND INSTALLATION
April 20th, 2018

PROGRAMMATION BIESSE

LOCATION
LCBO / 042-6792619

MAT'L	QTÉ
RIP 4x8 5/8"	1/2
GB _x_ 5/8"	-
GB _x_ 5/8"	-

ITEM	No PRODUIT	Description_AN	LONG.(WG)	LARG.	THICK.	Qty	TO SEND
1	042-679X	CRANK HANDLE	-			1	YES
2	042-67925F	STEEL PLATE TO FIX CANVAS	-	-	-	1	YES
3	042-67925T	FLEXIBLE CANVAS	25 1/2	-	-	1	
4	042-6791815	ADJUSTABLE SHELF SYSTEM	-	-	-	1	
5	101RIP200	PRESSWOOD 5/8"X49"X97"	25 7/16"	18 11/16"	5/8"	1	
6	101RIP200	PRESSWOOD 5/8"X49"X97"	25 7/16"	3 3/4"	5/8"	1	
7	101RIP200	PRESSWOOD 5/8"X49"X97"	25 7/16"	3 3/4"	5/8"	1	
8	101RIP200	PRESSWOOD 5/8"X49"X97"	24 3/16"	17 7/16"	5/8"	1	
9	101RIP200	PRESSWOOD 5/8"X49"X97"	18 9/32"	3 3/4"	5/8"	1	
10	101RIP200	PRESSWOOD 5/8"X49"X97"	18 9/32"	3 3/4"	5/8"	1	
11	105BOR177	EDGE 1MM. X 15/16"ALMOND #920 PANVAL	25 7/16"	15/16	1/32"	2	
12	105BOR177	EDGE 1MM. X 15/16"ALMOND #920 PANVAL	17 7/16"	15/16	1/32"	2	
13	105PLA100-920	FORMICA #920 1/32" 4X8 FINI #38 AMANDE	25 15/32"	3 15/16"	1/32"	1	
14	105PLA100-920	FORMICA #920 1/32" 4X8 FINI #38 AMANDE	25 15/32"	3 15/16"	1/32"	1	
15	105PLA100-920	FORMICA #920 1/32" 4X8 FINI #38 AMANDE	25 1/2"	18 3/4"	1/32"	1	
16	105PLA100-920	FORMICA #920 1/32" 4X8 FINI #38 AMANDE	18 11/16"	3 15/16"	1/32"	2	
17	118VIS172	#8 SCREW 3/4"LONG, PAN HEAD	-	-	-	4	YES
18	118VIS177	#8 SCREW 3/4" LONG, FLAT HEAD-LO ROOT	-	-	-	8	YES
19	ALBY02-24	ALUMINUM ANGLE	-	-	-	1	

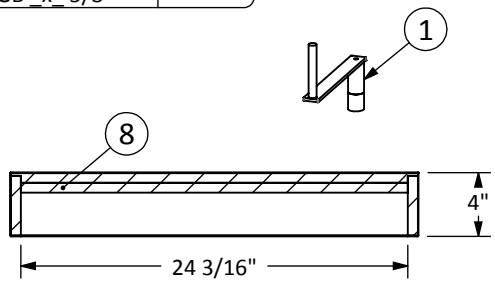

SECTION B-B

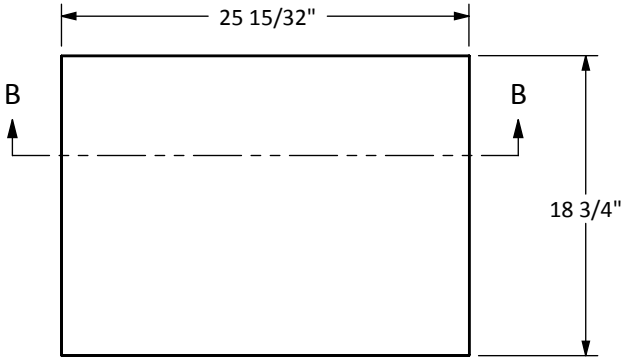

IMPORTANT
THE BOLT MUST BE RECESSED 1/8"
BEFORE ATTACHING THE SHELF

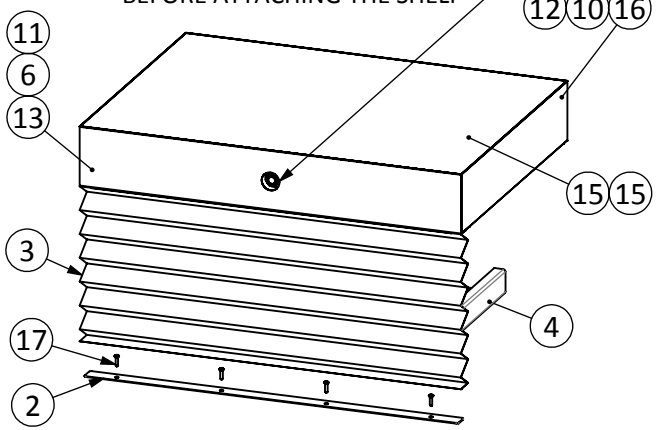

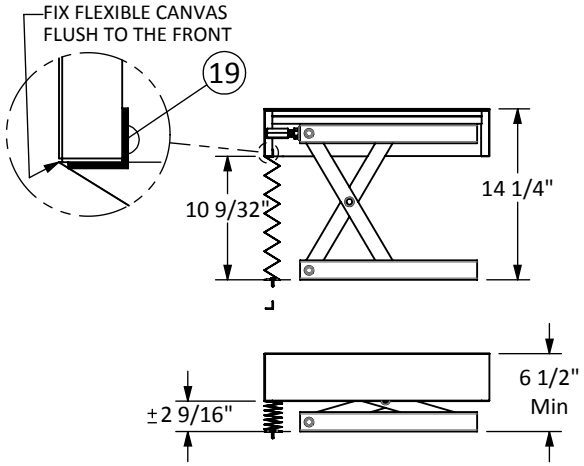

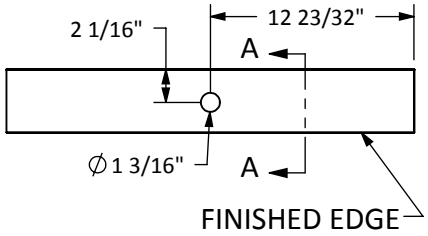

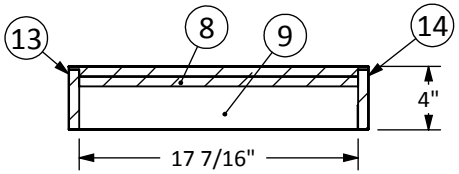

SECTION A-A

REV	DESCRIPTION	DATE	Init.
	REVISIONS		

Vicmobilier | Vicstore

Description: SHELF C/W ADJUSTABLE SYSTEM

W:\dessin\042\

Fabrication: Bois

POUNDS: 30.91394 Lbs

All the information contained in this drawing is the sole property of Vic Store Fixtures. Any reproduction or change without written notice is prohibited.

TOLERANCES GENERALES
(SI NON SPÉCIFIÉES / IF NOT SPECIFIED)
Fractions: ±1/16" Angles: ±0.5°

Dess. Dany B. Date 03-20-15

Verif. Jimmy G. Date 03-20-15

Sheet 1 de 1

No. of plan: **042-6792619-ENG**

Rev: **0**

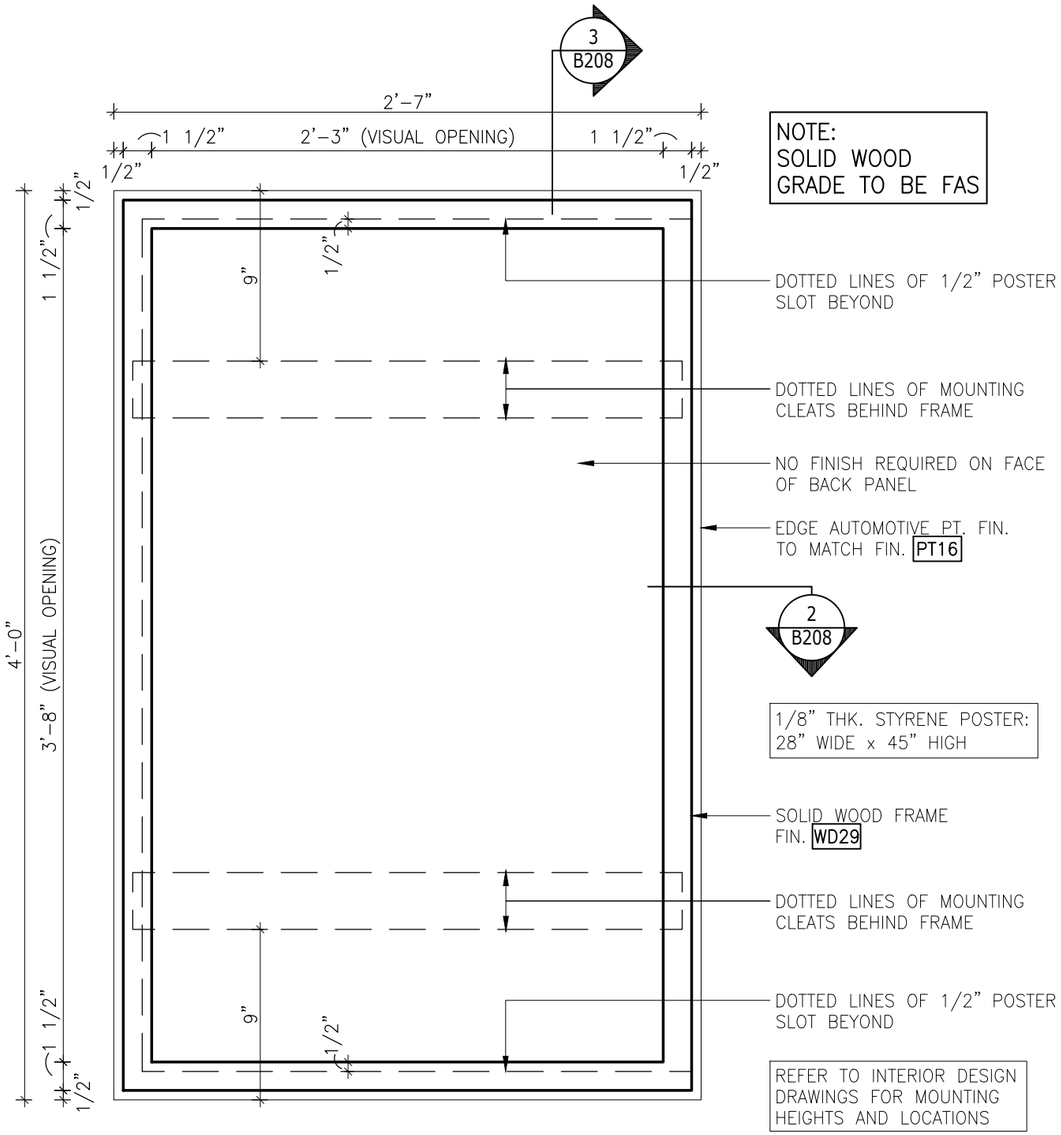

1 B208 ELEVATION
1 1/2" = 1'-0"

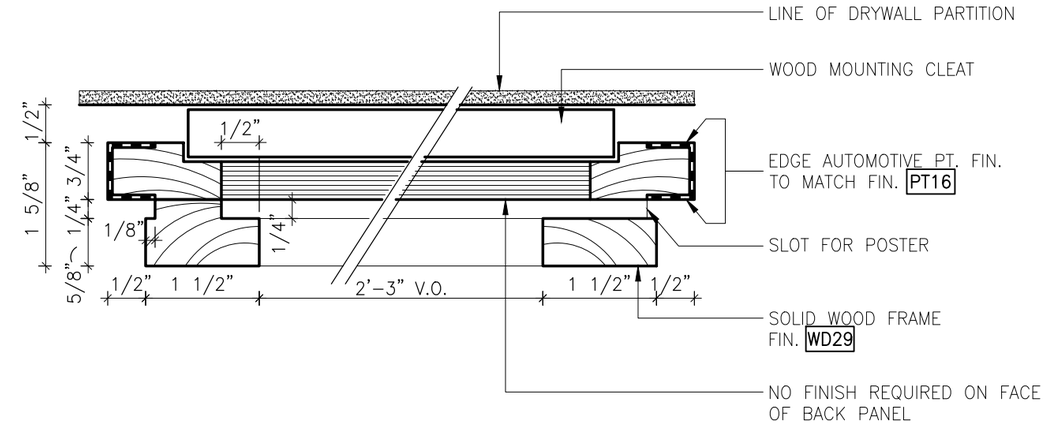

2 B208 PLAN-SECTION
6" = 1'-0"

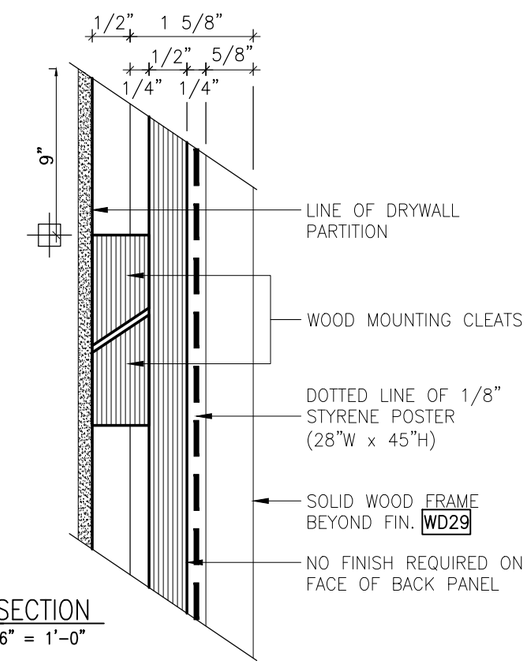

3 B208 SECTION
6" = 1'-0"

LCBO	B200 GENERAL LIST	REVISION DATE	REV.	1 of 1	ISSUE DATE	STORE TYPE	STORE #
	TYPICAL P.O.P. FRAME DETAILS	2019 NOV	01	B208	2019 NOV		312

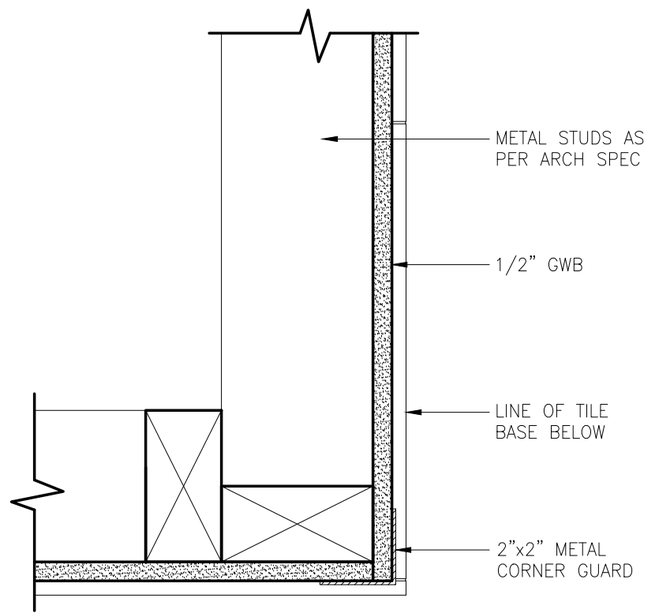

1 / B210 PLAN
3" = 1'-0"

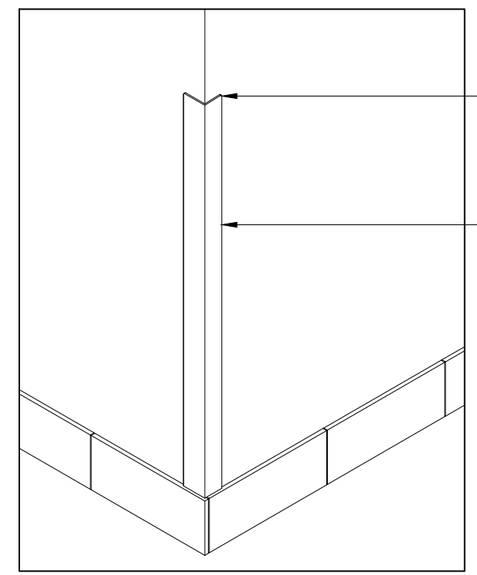

CORNERS TO HAVE
SLIGHT RADIUS

2" x 2" x 32" METAL CORNER
GUARD FIN. MT55
ALL EDGES TO BE SOFTENED
SO THAT THERE ARE NO
SHARP CORNERS.
SUBMIT SAMPLE FOR
APPROVAL.

G.C. TO PROVIDE WOOD BLOCKING
WITHIN PARTITION AS REQUIRED.
CO-ORDINATE WITH LCBO RE:
METHOD OF ATTACHMENT.

NOTE:
START FULL TILE AT CORNERS SO
THAT CUT EDGE IS NOT EXPOSED

2 / B210 ISOMETRIC VIEW
N.T.S.

LCBO	B200 GENERAL LIST	REVISION DATE	REV.	1 of 1	ISSUE DATE	STORE TYPE	STORE #
	2" x 2" x 32" METAL CORNER GUARD	2019 NOV	01	B210	2019 NOV		312

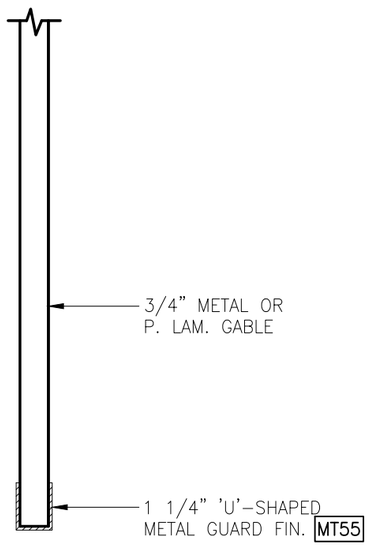

1 / B211 PLAN
3" = 1'-0"

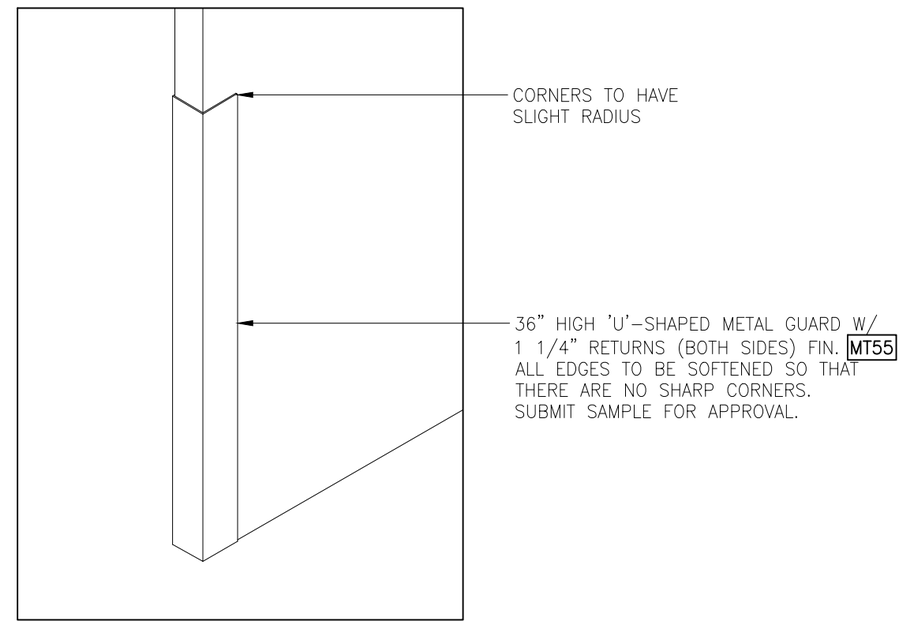

2 / B211 ISOMETRIC VIEW
N.T.S.

LCBO	B200 GENERAL LIST	REVISION DATE	REV.	1 of 1	ISSUE DATE	STORE TYPE	STORE #
	'U'-SHAPED MET. CORNER (36" HIGH W/ 1 1/4" RET.)	2019 NOV	01	B211	2019 NOV		312

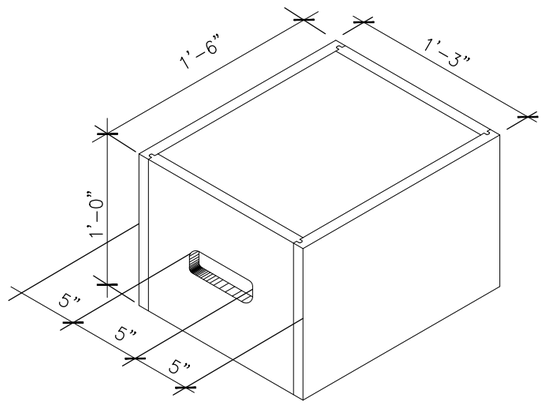

1 B214 TYPE 'A'
N.T.S.

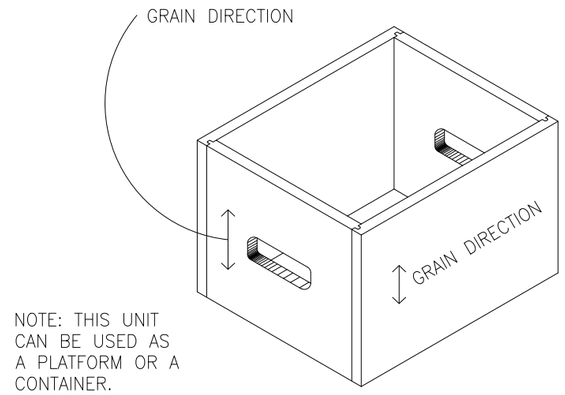

NOTE: THIS UNIT CAN BE USED AS A PLATFORM OR A CONTAINER.

2 B214 TYPE 'A'
N.T.S.

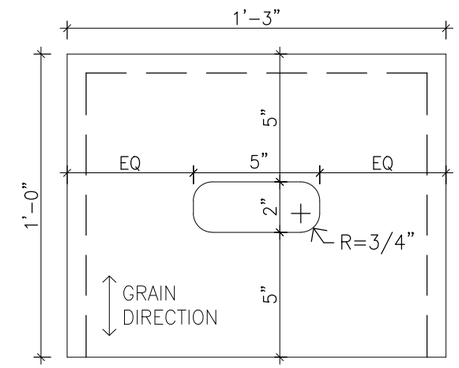

3 B214 TYPE 'A' ELEVATION
1" = 1'-0"

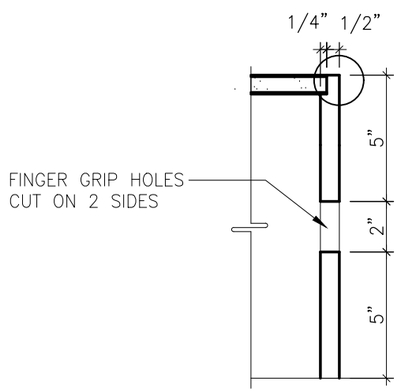

4 B214 TYPE 'A' TYPICAL SECTION
N.T.S.

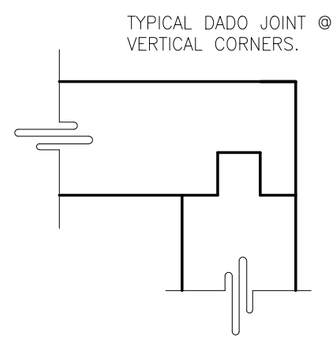

5 B214 TYPE 'A' TYPICAL CORNER SECTION
N.T.S.

NOTES

-TYPE A UNITS TO BE CONSTRUCTED OF 3/4" OAK VENEERED PLYWOOD FIN. WD28 SEALED W/ CLEAR LACQUER FINISH. EDGES TO BE FINISHED PLYWOOD NOT OAK VENEER.

NOTES

REFER TO ITEMIZATION LEGEND FOR QUANTITY OF PRODUCT RISERS. TYPICALLY (1) UNIT REQUIRED PER END PLINTH.

LCBO	B200 GENERAL LIST	REVISION DATE	REV.	1 of 1	ISSUE DATE	STORE TYPE	STORE #
	PRODUCT RISER (TYPE A)	2019 NOV	01	B214	2019 NOV		312

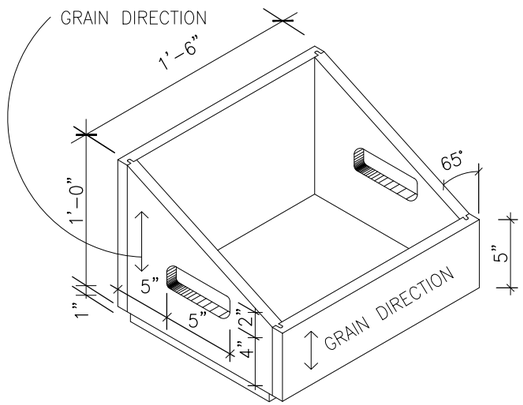

1 / B215 TYPE 'B'
N.T.S.

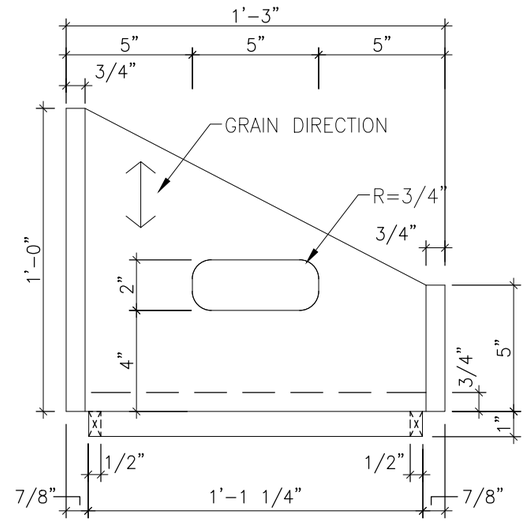

2 / B215 TYPE 'B' SIDE ELEVATION
2" = 1'-0"

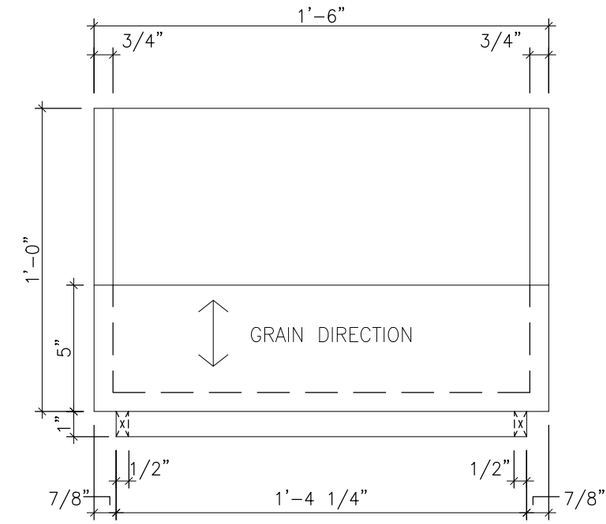

5 / B215 TYPE 'B' FRONT ELEVATION
2" = 1'-0"

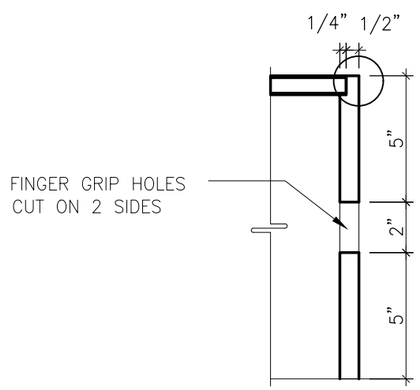

3 / B215 TYPICAL SECTION
N.T.S.

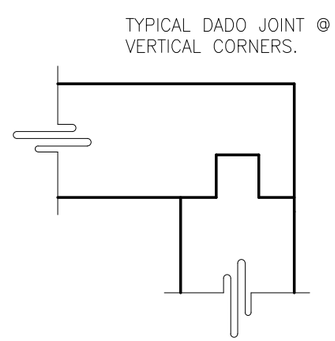

4 / B215 TYPICAL CORNER SECTION
N.T.S.

NOTES

-UNITS TO BE CONSTRUCTED OF 3/4" OAK VENEERED PLYWOOD FIN. WD28 SEALED W/ CLEAR LACQUER FINISH. EDGES TO BE FINISHED PLYWOOD NOT OAK VENEER.

REFER TO ITEMIZATION LEGEND FOR QUANTITY OF PRODUCT RISERS. TYPICALL (1) UNIT REQUIRED FOR EVERY 2 END PLINTHS.

NOTE:
ITEM B215 SITS 1" DOWN IN ITEM B214

LCBO	B200 GENERAL LIST	REVISION DATE	REV.	1 of 1	ISSUE DATE	STORE TYPE	STORE #
	PRODUCT RISER (TYPE B)	2019 NOV	01	B215	2019 NOV		312

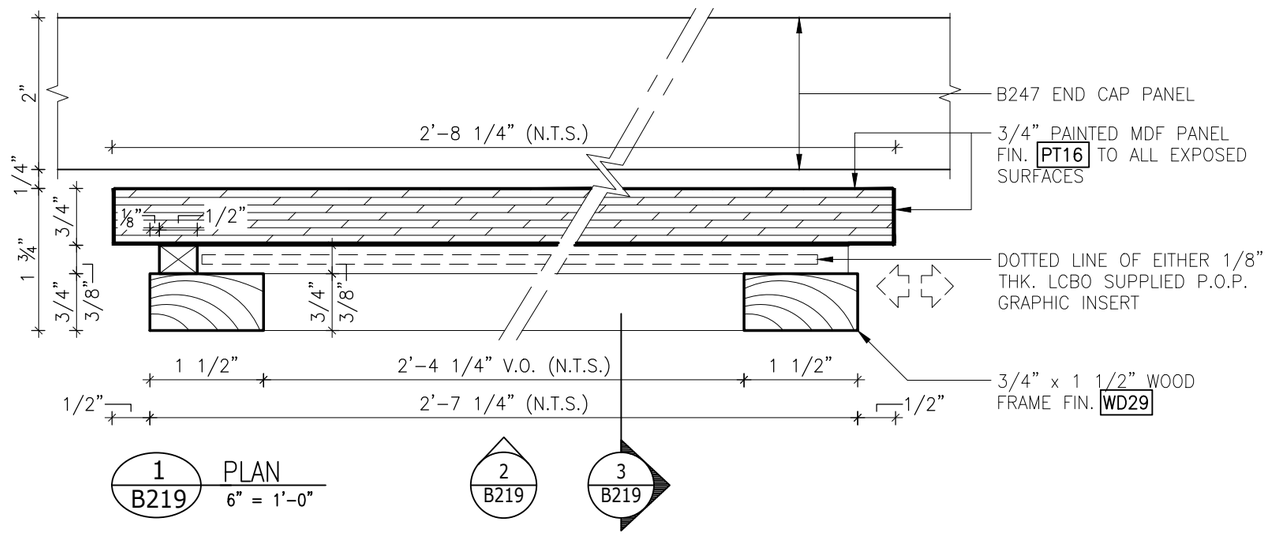

1 / B219 PLAN
6" = 1'-0"

2 / B219

3 / B219

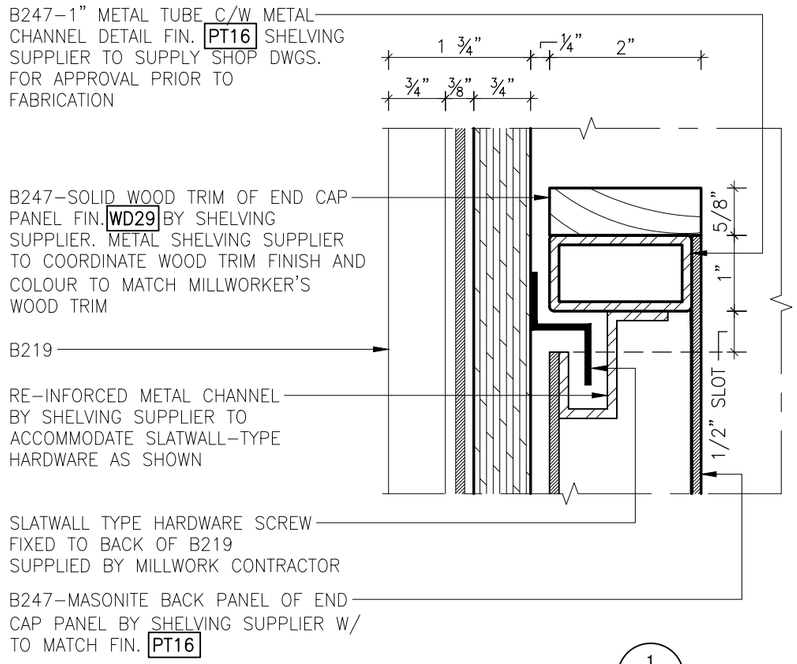

4 / B219 DETAIL
6" = 1'-0"

NOTE:
SOLID WOOD GRADE TO BE FAS

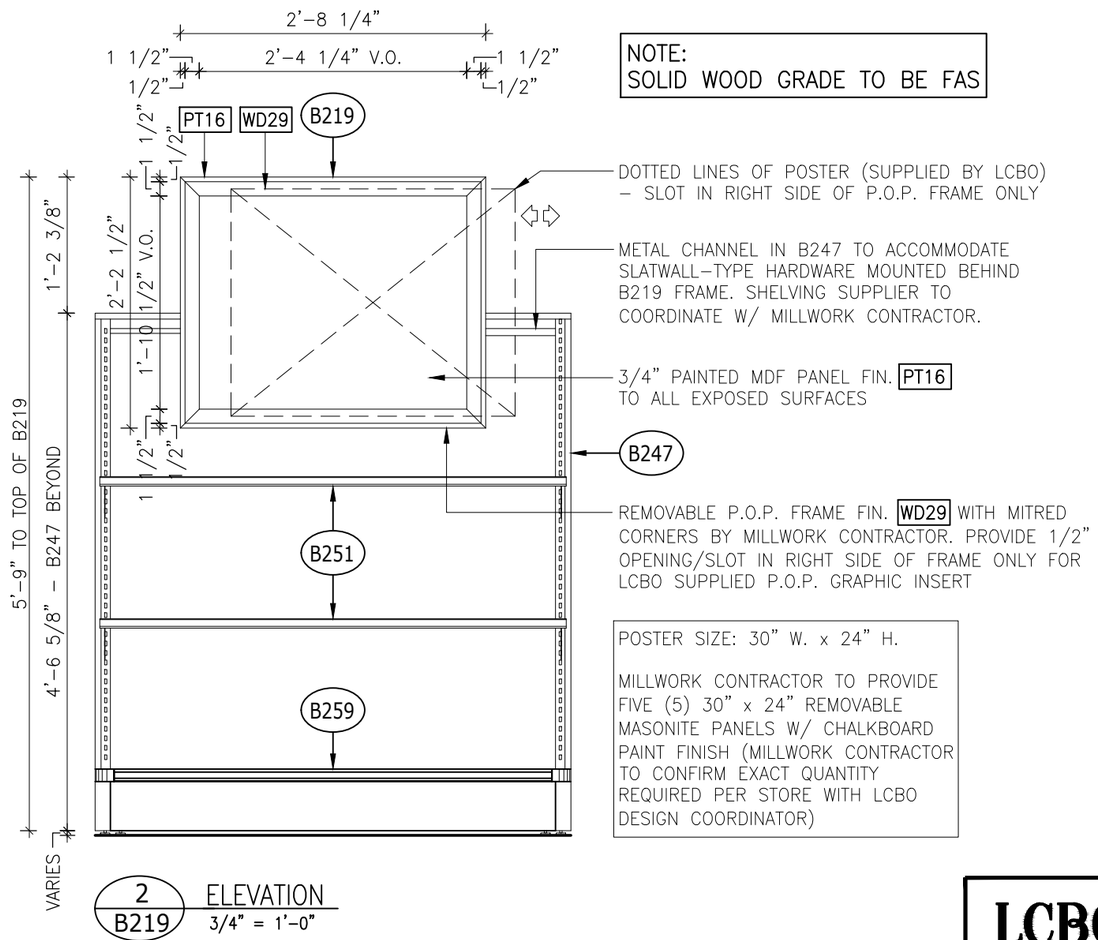

POSTER SIZE: 30" W. x 24" H.

MILLWORK CONTRACTOR TO PROVIDE FIVE (5) 30" x 24" REMOVABLE MASONITE PANELS W/ CHALKBOARD PAINT FINISH (MILLWORK CONTRACTOR TO CONFIRM EXACT QUANTITY REQUIRED PER STORE WITH LCBO DESIGN COORDINATOR)

2 / B219 ELEVATION
3/4" = 1'-0"

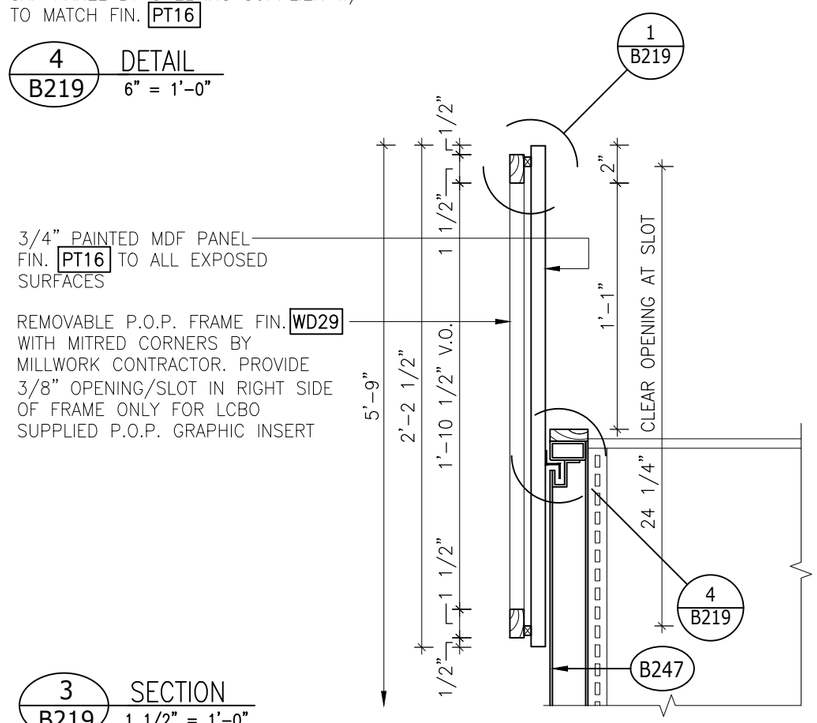

3 / B219 SECTION
1 1/2" = 1'-0"

LCBO	B200 GENERAL LIST	REVISION DATE	REV.	1 of 1	ISSUE DATE	STORE TYPE	STORE #
	REMOVABLE GONDOLA P.O.P FRAME	2019 NOV	01	B219	2019 NOV		312

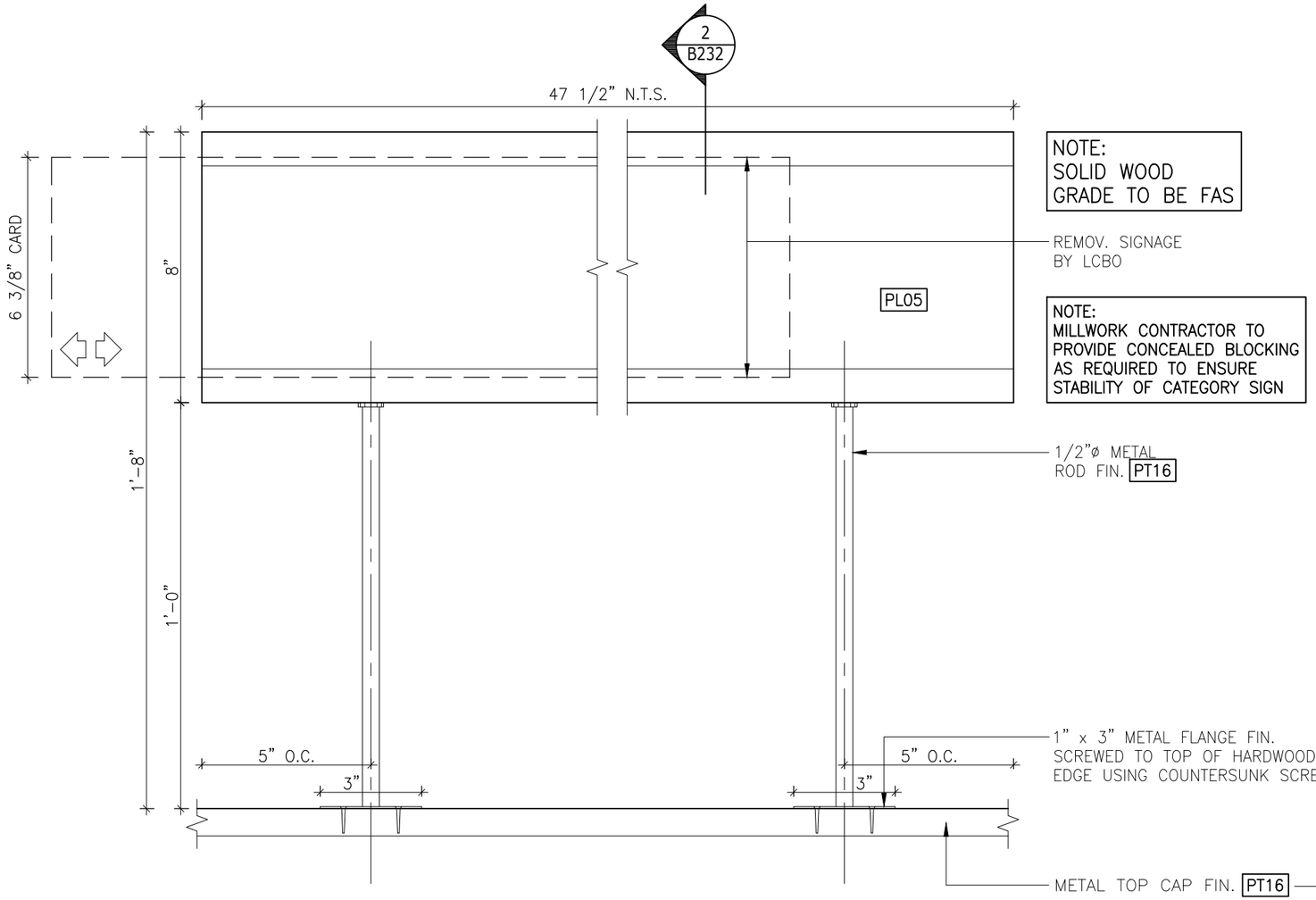

NOTE:
SOLID WOOD
GRADE TO BE FAS

NOTE:
MILLWORK CONTRACTOR TO PROVIDE CONCEALED BLOCKING AS REQUIRED TO ENSURE STABILITY OF CATEGORY SIGN

1 B232 ELEVATION
3" = 1'-0"

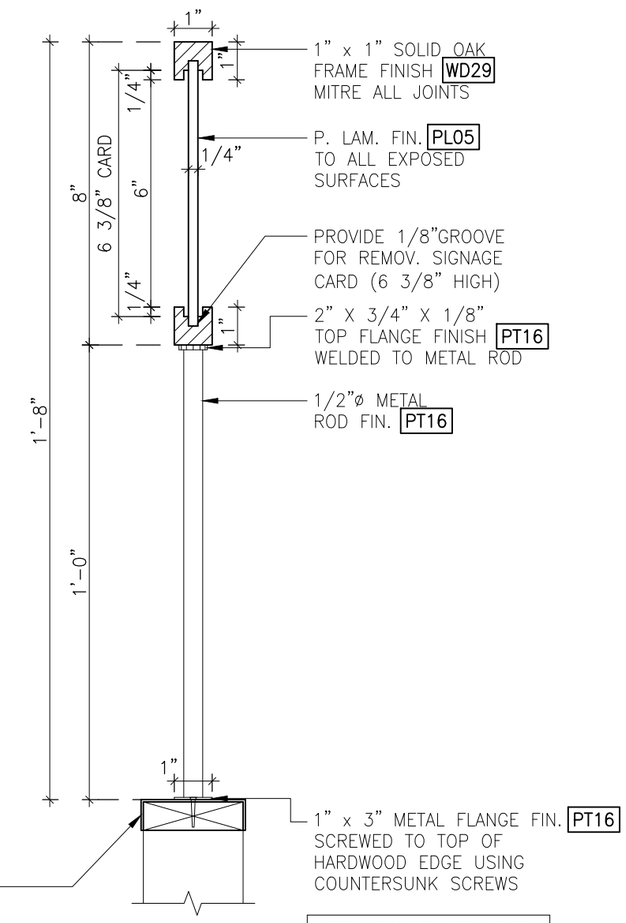

NOTE: CONCEALED WOOD BLOCKING REQ'D. TO U/S OF METAL TOP CAP TO SECURE CATEGORY SIGNS

2 B232 SECTION
3" = 1'-0"

LCBO	B200 GENERAL LIST	REVISION DATE	REV.	1 of 1	ISSUE DATE	STORE TYPE	STORE #
	4-HIGH GONDOLA CATEGORY SIGN	2019 NOV	01	B232	2019 NOV		312

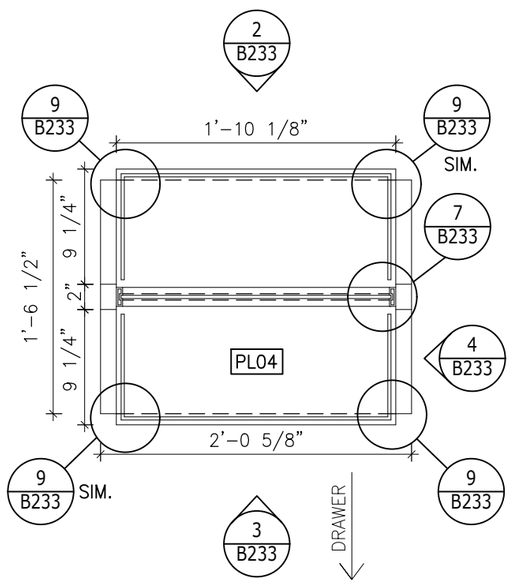

1 B233 PLAN
1" = 1'-0"

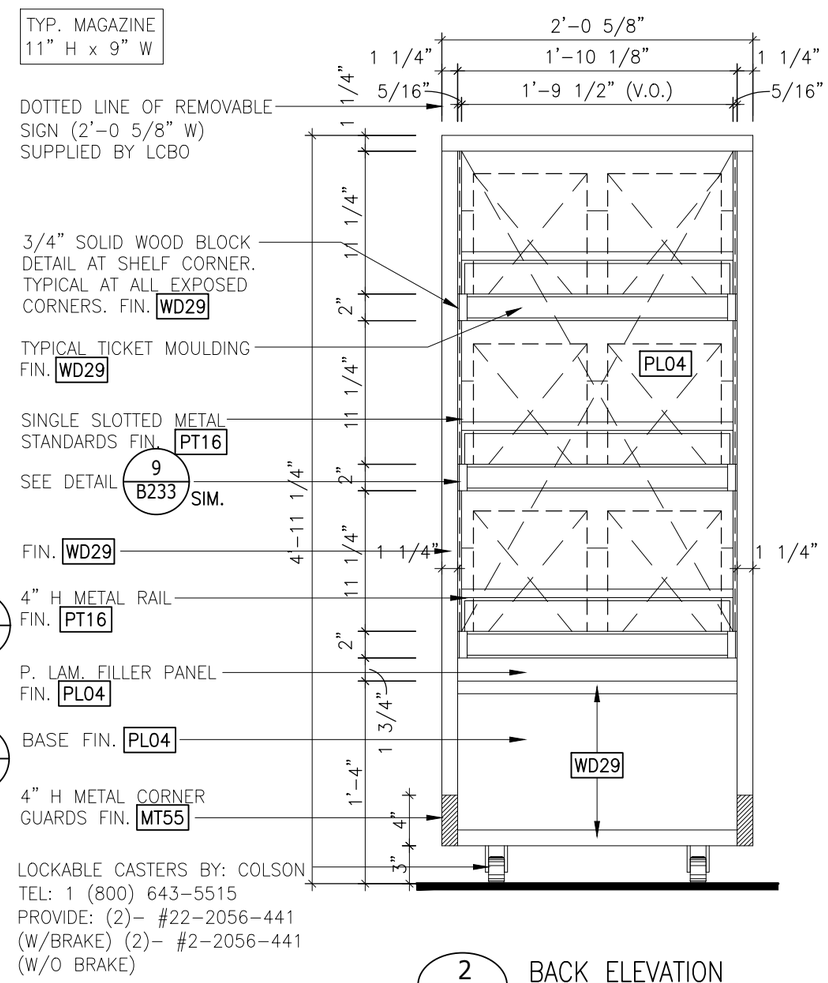

2 B233 BACK ELEVATION
1" = 1'-0"

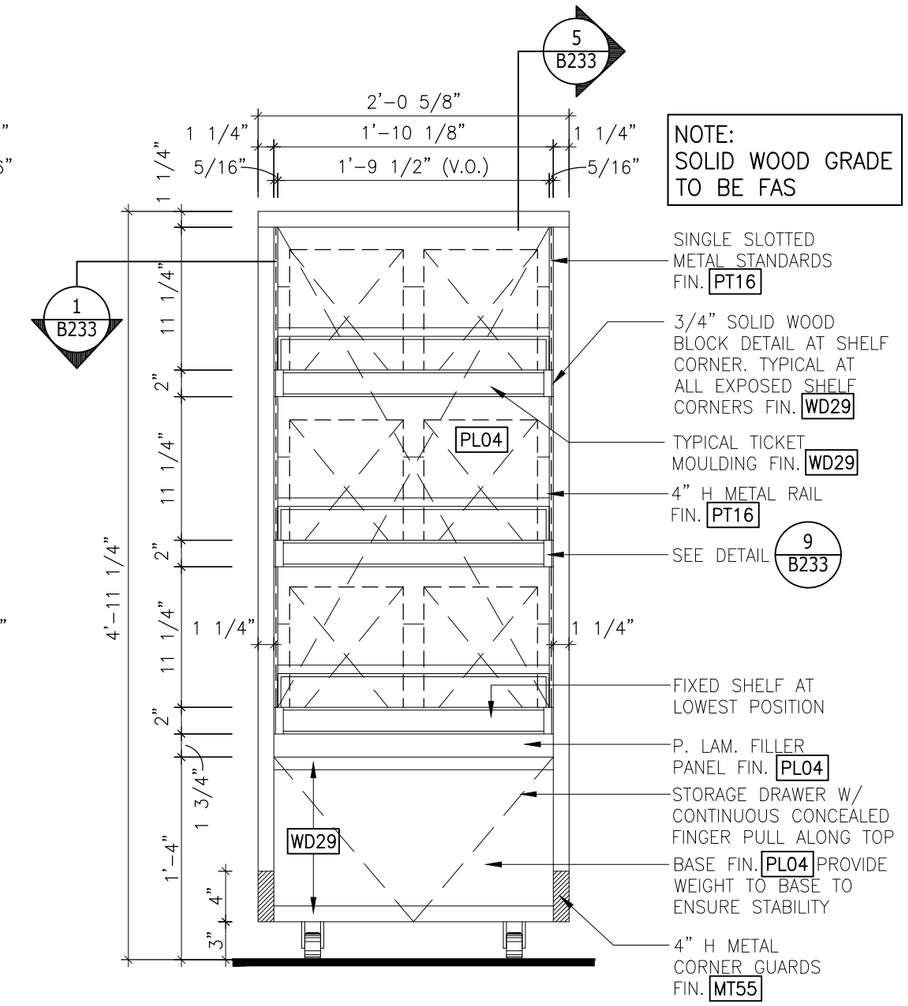

3 B233 FRONT ELEVATION
1" = 1'-0"

LCBO	B200 GENERAL LIST	REVISION DATE	REV.	1 OF 4	ISSUE DATE	STORE TYPE	STORE #
	FOOD & DRINK STAND	2019 NOV	01	B233	2019 NOV		312

NOTE:
SOLID WOOD GRADE
TO BE FAS

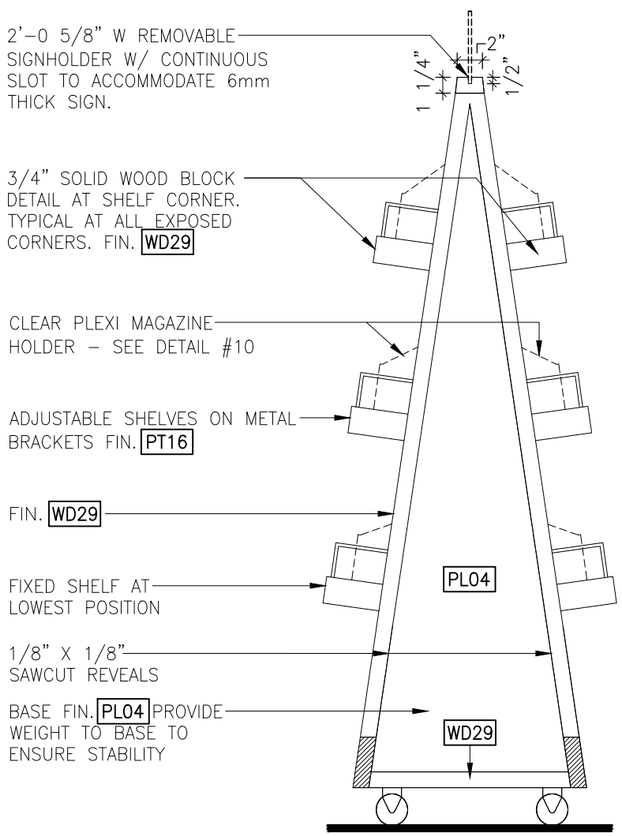

4 B233 SIDE ELEVATION
1" = 1'-0"

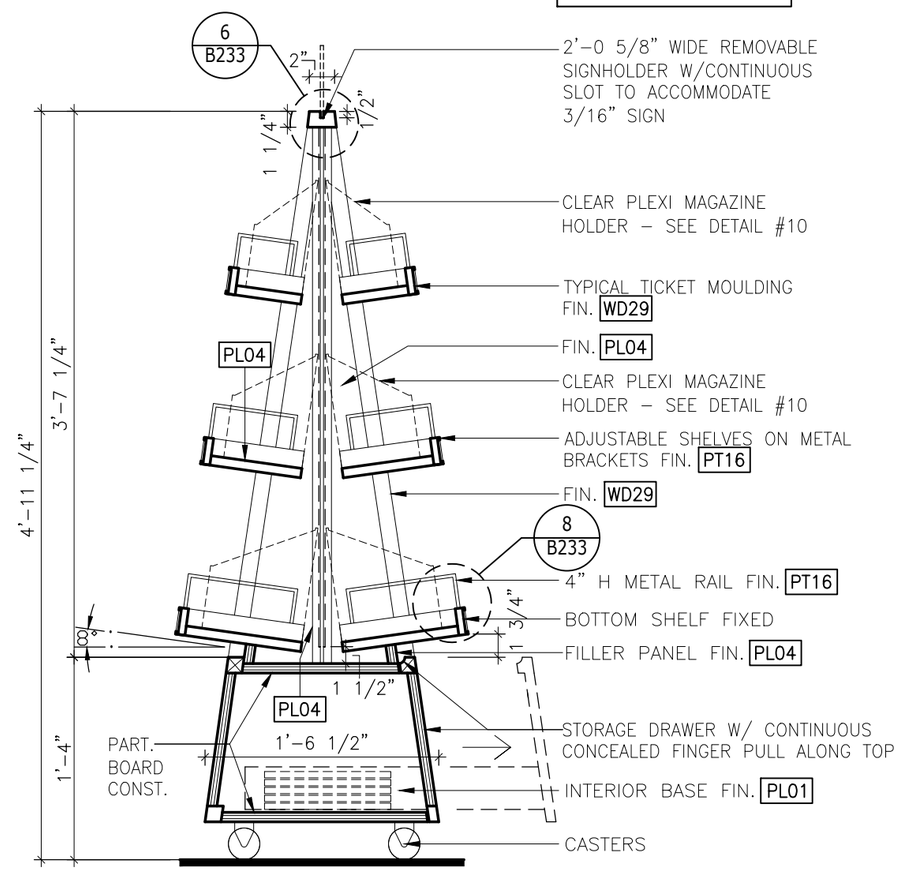

5 B233 SECTION
1" = 1'-0"

NOTE:
FOOD & DRINK CLEAR PLEXI INSERT BY MILLWORK CONTRACTOR TO BE CONSTRUCTED OF 1/4" THK. CLEAR PLEXI GLASS. PLEXI BASE REQUIRED.

(1) PER SHELF REQUIRED.

CLEAR PLEXI MAGAZINE HOLDERS PROVIDED BY MILLWORKER SIZE TO FIT SHELVES

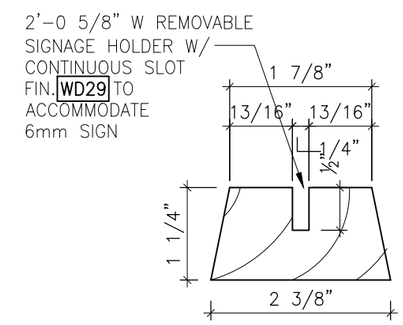

6 B233 DETAIL
6" = 1'-0"

LCBO	B200 GENERAL LIST	REVISION DATE	REV.	2 OF 4	ISSUE DATE	STORE TYPE	STORE #
	FOOD & DRINK STAND	2019 NOV	01	B233	2019 NOV		312

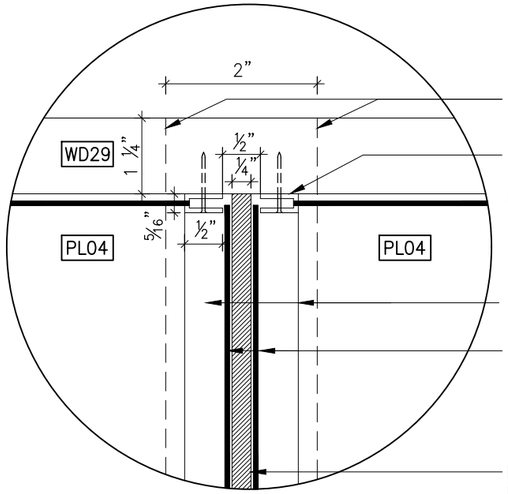

1/4" SQ. METAL RAIL
4" H FIN. PT16

DOTTED LINES OF REMOVABLE
WOOD CAP ABOVE

SINGLE SLOTTED METAL
STANDARD FIN. PT16 SCREWED TO
PANEL THROUGH SIDE

P. LAM. FIN. PL04

FILLER PANEL BELOW FIN. PL04

DOTTED LINES OF REMOVABLE 1/16"
THICK LAMINATED P.O.P.

TYPICAL TICKET MOULDING FIN. WD29
TO ACCOMMODATE 1¾" PAPER TICKET

FIXED P. LAM. PANEL W/ FIN. PL04
BOTH SIDES

NOTE:
SOLID WOOD GRADE TO BE FAS

7 / B233 DETAIL
6" = 1'-0"

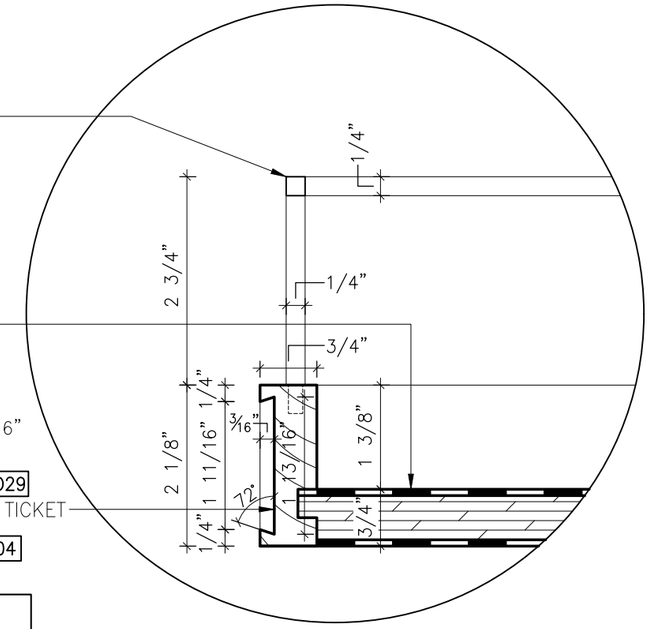

8 / B233 DETAIL
6" = 1'-0"

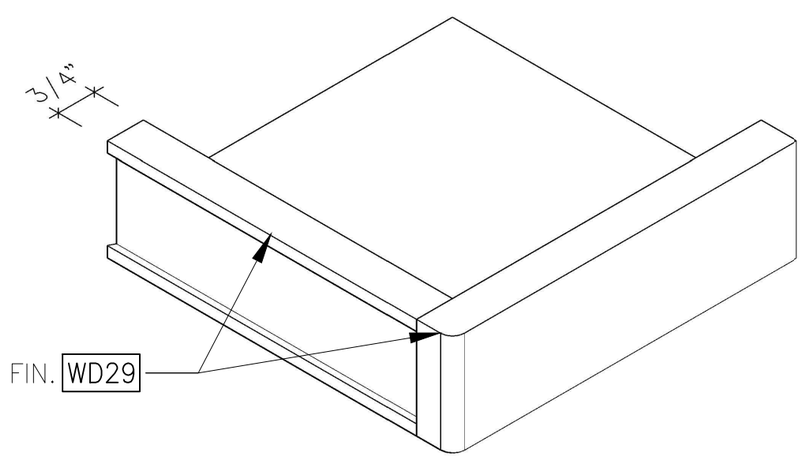

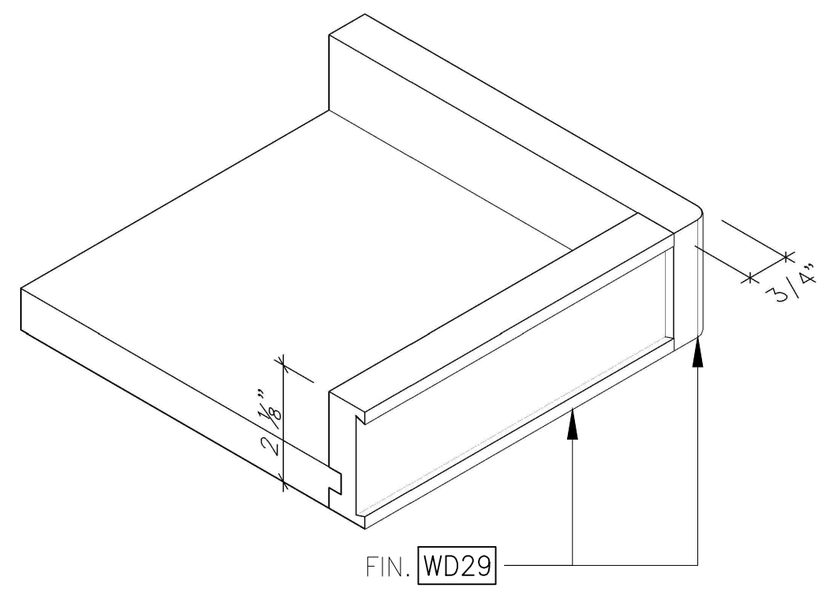

9 / B233 ISOMETRIC VIEWS – WOOD BLOCK DETAIL
AT TICKET MOULDING

LCBO	B200 GENERAL LIST	REVISION DATE	REV.	3 OF 4	ISSUE DATE	STORE TYPE	STORE #
	FOOD & DRINK STAND	2019 NOV	01	B233	2019 NOV		312

NOTE:

CLEAR PLEXI HOLDER DEPTHS VARY:

TOP SHELF PLEXI HOLDER IS 5 1/2" DEEP.

MIDDLE SHELF PLEXI HOLDER IS 7 1/4" DEEP.

BOTTOM SHELF PLEXI HOLDER IS 9" DEEP.

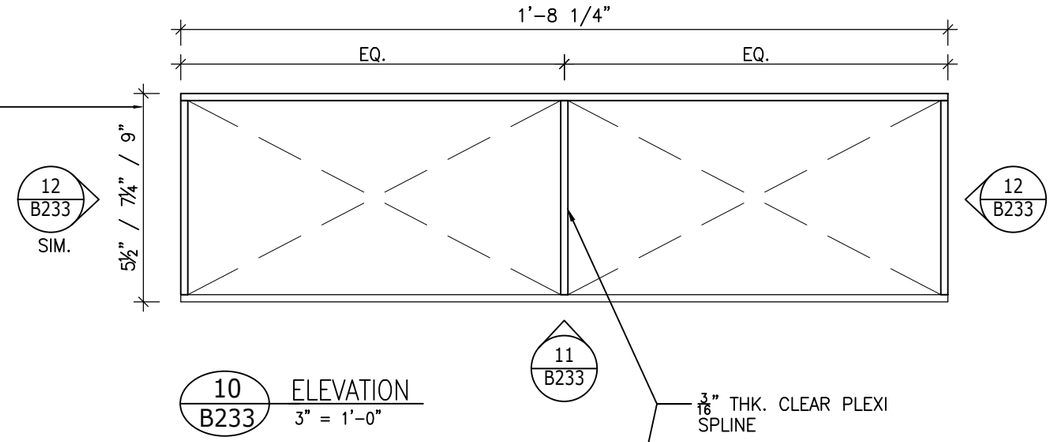

10 B233 ELEVATION
3" = 1'-0"

NOTE:
FOOD & DRINK CLEAR PLEXI INSERT BY MILLWORK CONTRACTOR TO BE CONSTRUCTED OF 1/4" THK. CLEAR PLEXI GLASS.
PLEXI BASE REQUIRED.

(1) PER SHELF REQUIRED.

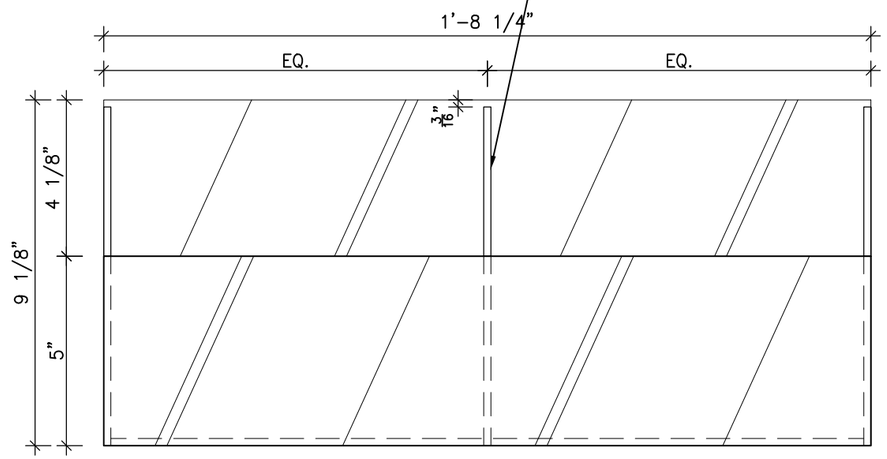

11 B233 ELEVATION
3" = 1'-0"

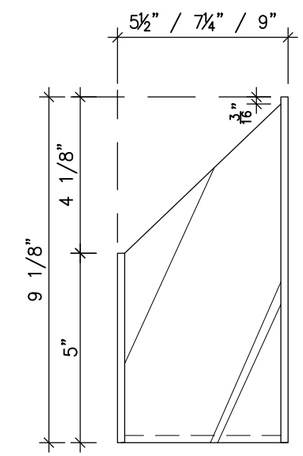

12 B233 ELEVATION
3" = 1'-0"

LCBO	B200 GENERAL LIST	REVISION DATE	REV.	4 OF 4	ISSUE DATE	STORE TYPE	STORE #
	FOOD & DRINK STAND - PLEXI INSERT	2019 NOV	01	B233	2019 NOV		312

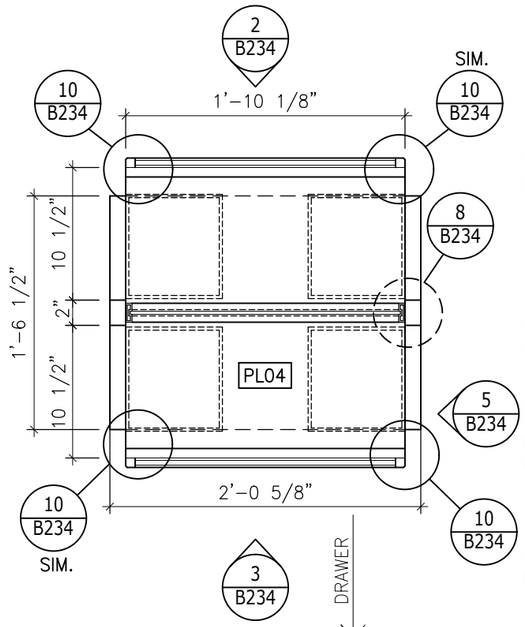

1 B234 PLAN
1" = 1'-0"

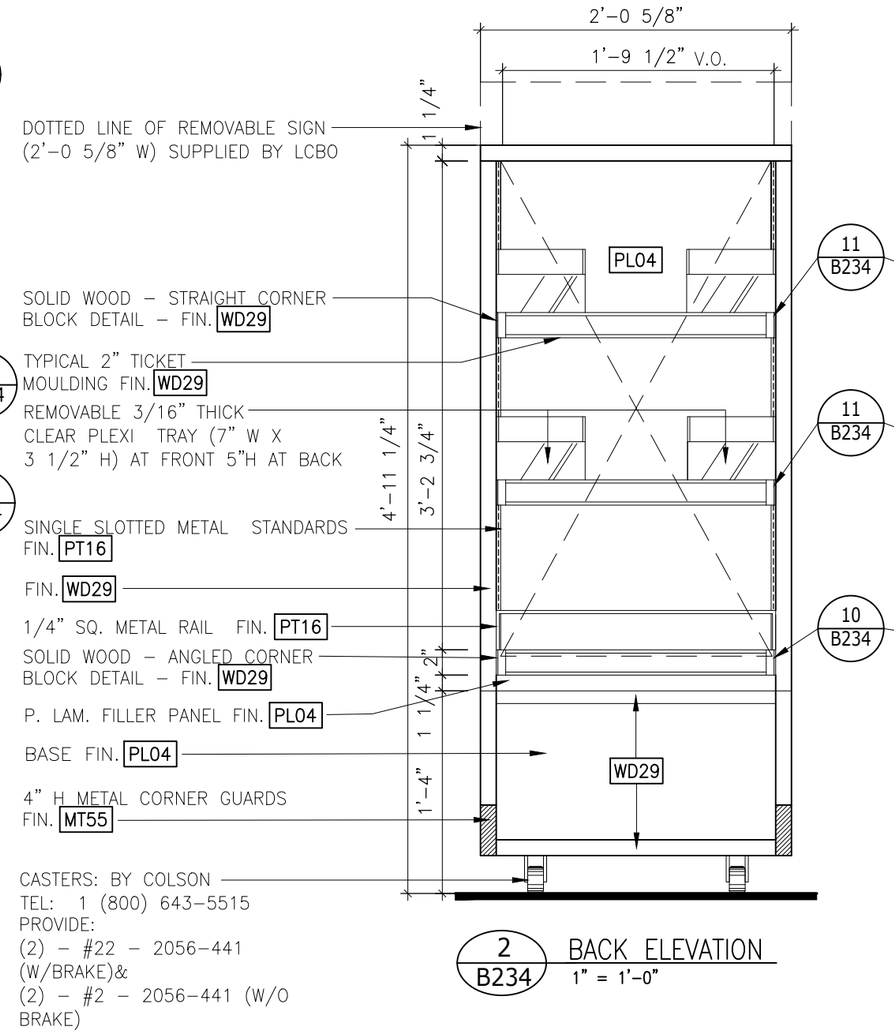

2 B234 BACK ELEVATION
1" = 1'-0"

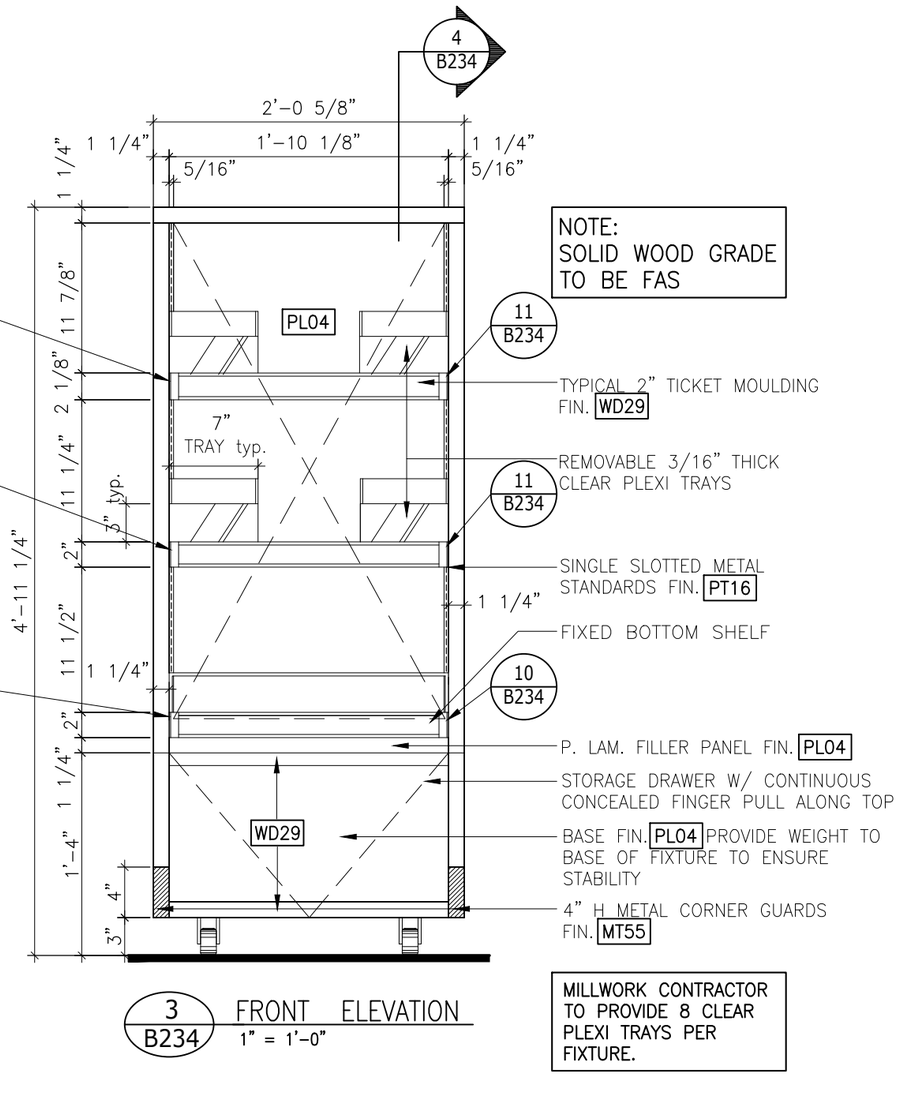

3 B234 FRONT ELEVATION
1" = 1'-0"

MILLWORK CONTRACTOR
TO PROVIDE 8 CLEAR
PLEXI TRAYS PER
FIXTURE.

LCBO	B200 GENERAL LIST	REVISION DATE	REV.	1 of 3	ISSUE DATE	STORE TYPE	STORE #
	'A' FRAME FIXTURE	2019 NOV	01	B234	2019 NOV		312

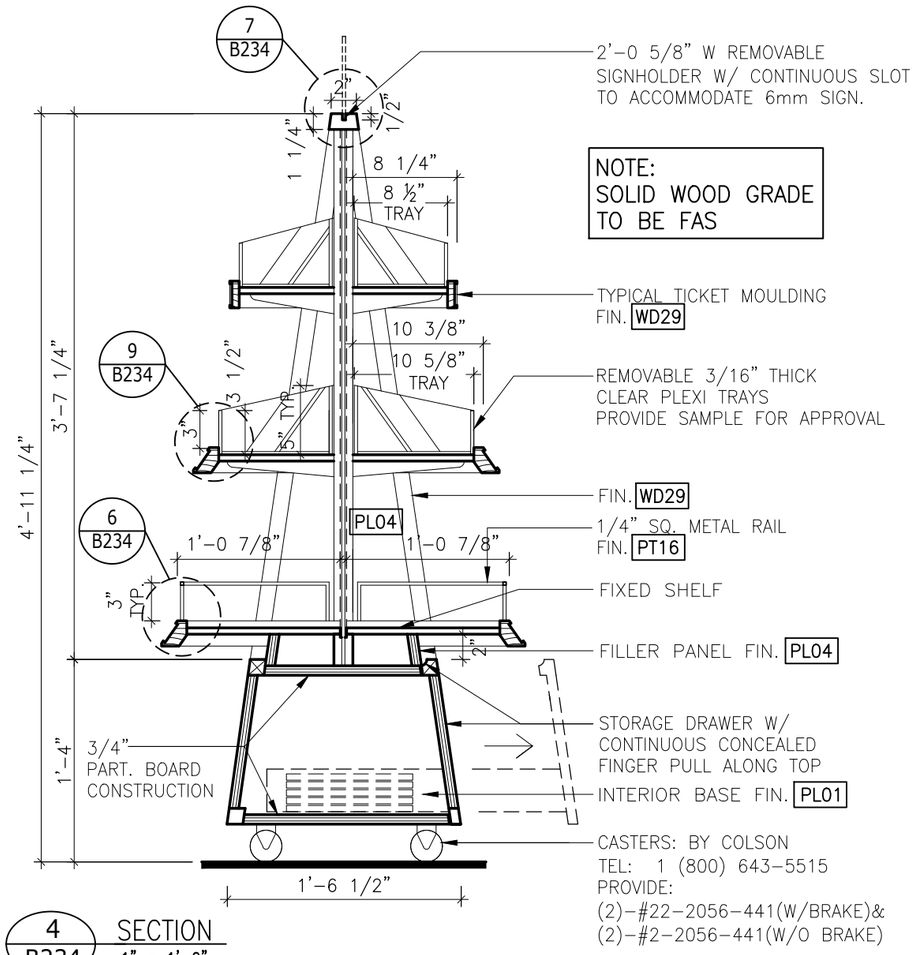

4 B234 SECTION
1" = 1'-0"

NOTE:
SOLID WOOD GRADE TO BE FAS

MILLWORK CONTRACTOR TO PROVIDE 8 CLEAR PLEXI TRAYS PER FIXTURE.

ALL SCREWS IN METAL CORNER GUARDS TO MATCH FINISH OF CORNER GUARDS AND TO BE COUNTERSUNK.

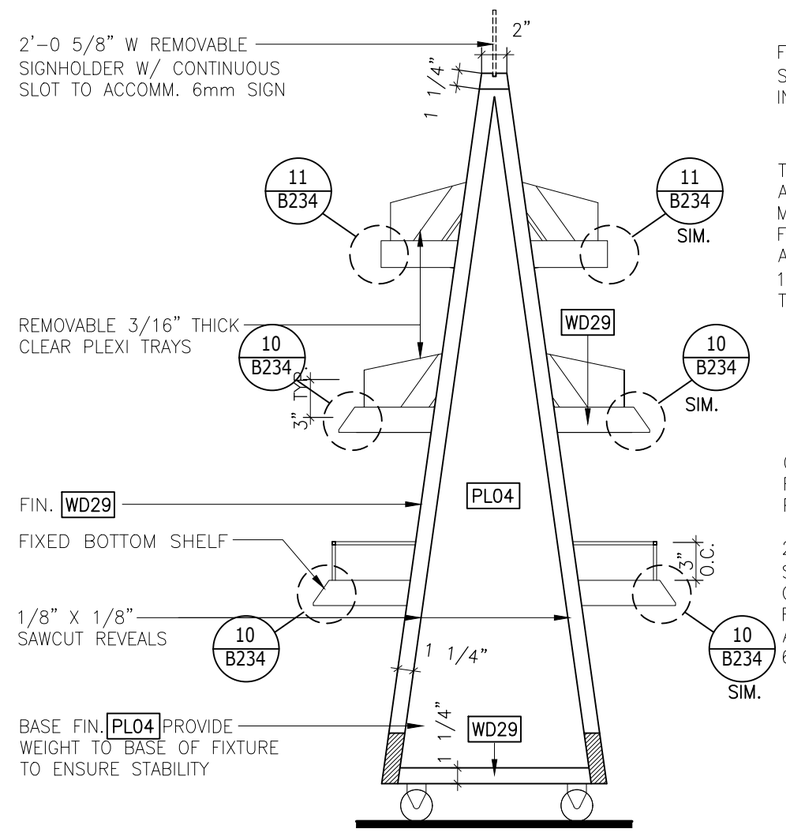

5 B234 SIDE ELEVATION
1" = 1'-0"

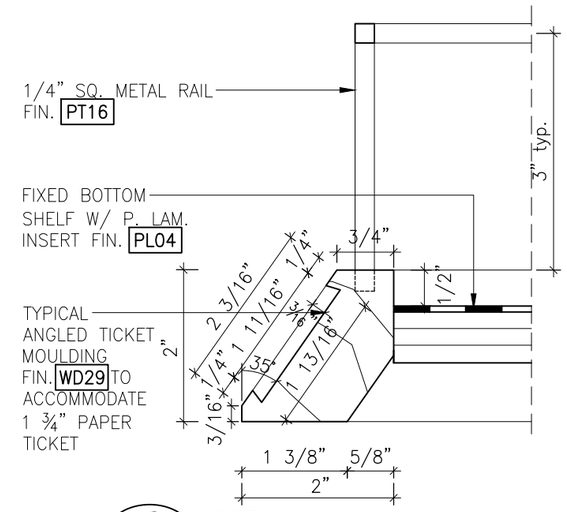

6 B234 DETAIL
6" = 1'-0"

OBTAIN SAMPLE SIGN FROM LCBO TO ENSURE PROPER FIT

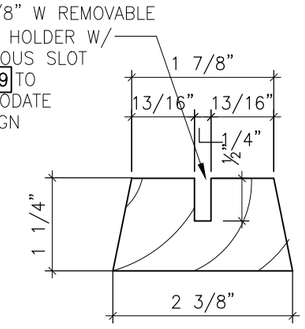

7 B234 DETAIL
6" = 1'-0"

LCBO	B200 GENERAL LIST	REVISION DATE	REV.	2 of 3	ISSUE DATE	STORE TYPE	STORE #
	'A' FRAME FIXTURE	2019 NOV	01	B234	2019 NOV		312

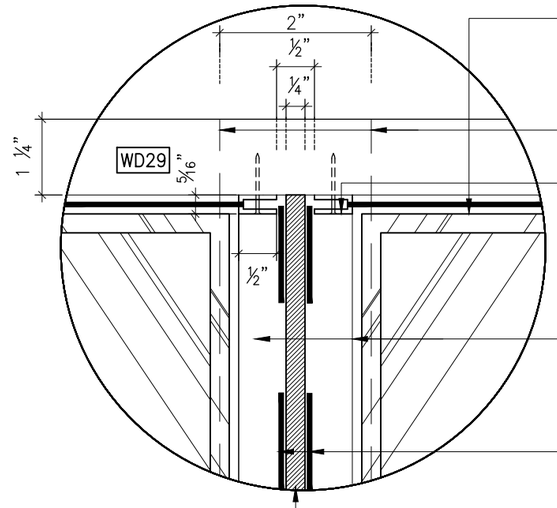

REMOVABLE 3/16" THK. CLEAR PLEXI TRAY C/W CLEAR PLEXI BASE

DOTTED LINES OF REMOVABLE WOOD CAP ABOVE

SINGLE SLOTTED METAL STANDARD FIN. PT16 SCREWED TO PANEL THROUGH SIDE

ADJUSTABLE SHELF W/ P. LAM. INSERT FIN. PL04

FILLER PANEL BELOW FIN. PL04

TYPICAL ANGLED TICKET MOULDING FIN. WD29 TO ACCOMMODATE 1¾" PAPER TICKET

DOTTED LINES OF REMOVABLE 1/16" THICK LAMINATED P.O.P.

METAL BRACKET FIN. PT16

FIXED PANEL W/ P. LAM. FIN. PL04 BOTH SIDES

8 / B234 DETAIL
6" = 1'-0"

NOTE:
SOLID WOOD GRADE TO BE FAS

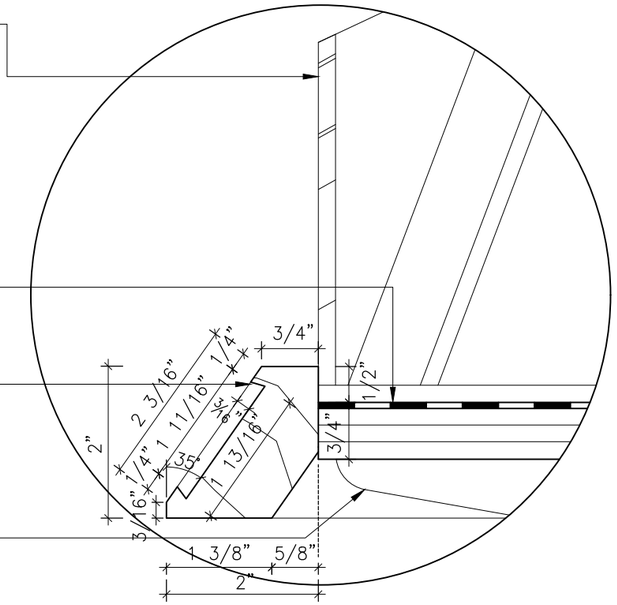

9 / B234 DETAIL
6" = 1'-0"

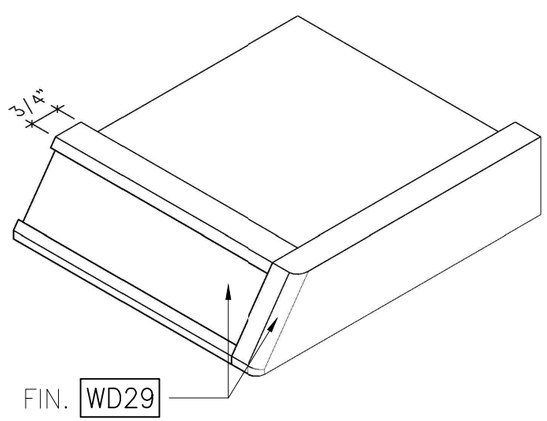

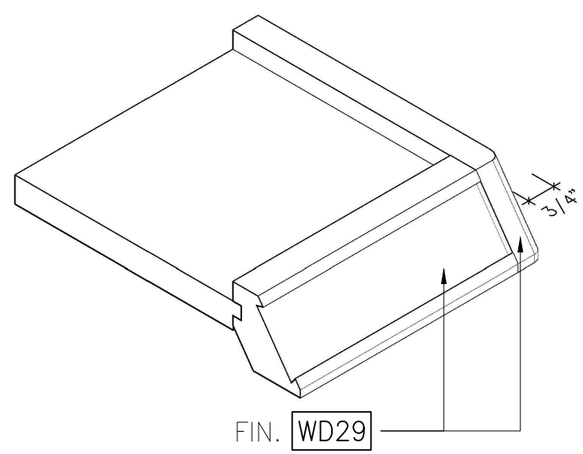

10 / B234 ISOMETRIC VIEWS – ANGLED WOOD BLOCK DETAIL
AT SHELF TICKET MOULDING

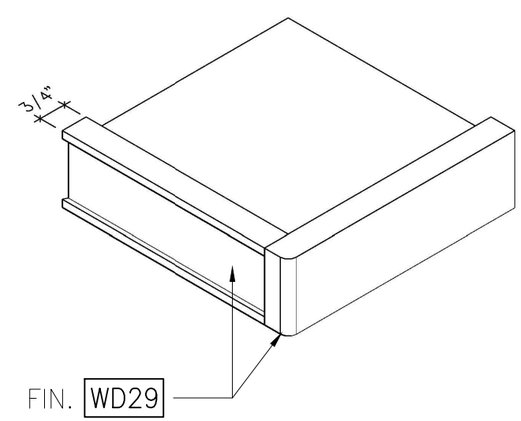

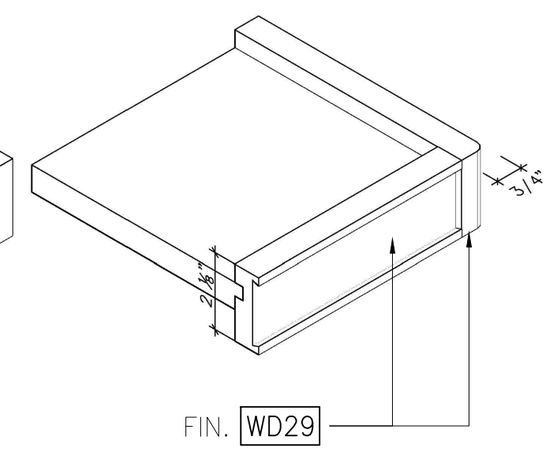

11 / B234 ISOMETRIC VIEWS – STRAIGHT WOOD BLOCK DETAIL
AT LOWEST SHELF TICKET MOULDING

LCBO	B200 GENERAL LIST	REVISION DATE	REV.	3 of 3	ISSUE DATE	STORE TYPE	STORE #
	'A' FRAME FIXTURE	2019 NOV	01	B234	2019 NOV		312

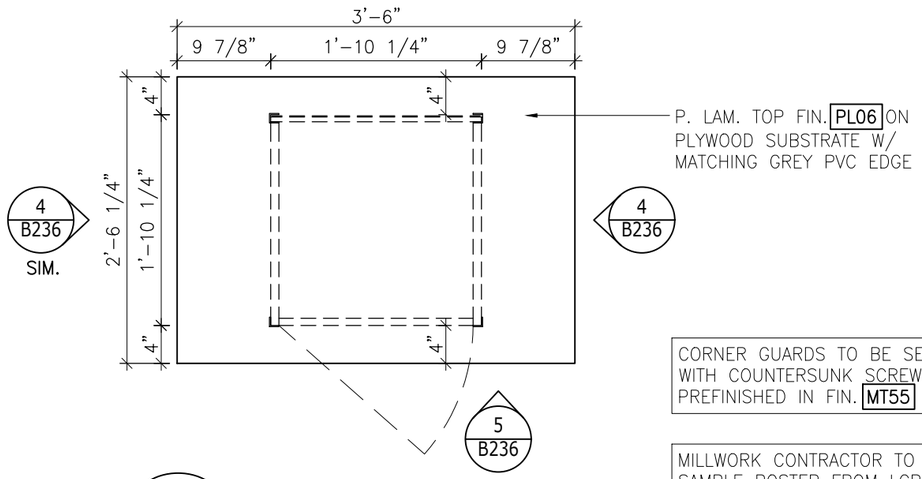

1/B236 PLAN
3/4" = 1'-0"

CORNER GUARDS TO BE SECURED WITH COUNTERSUNK SCREWS, PREFINISHED IN FIN. MT55

MILLWORK CONTRACTOR TO OBTAIN SAMPLE POSTER FROM LCBO PRIOR TO FABRICATION TO ENSURE PROPER FIT

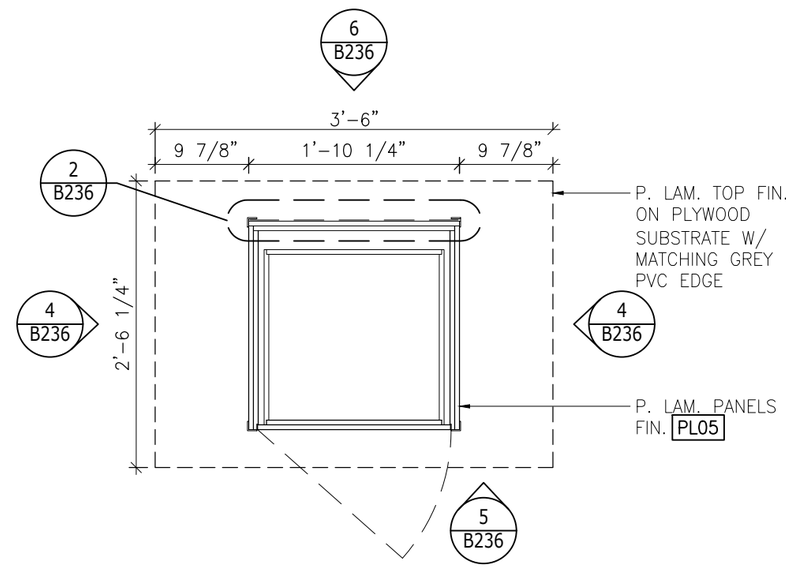

3/B236 PLAN-SECTION
3/4" = 1'-0"

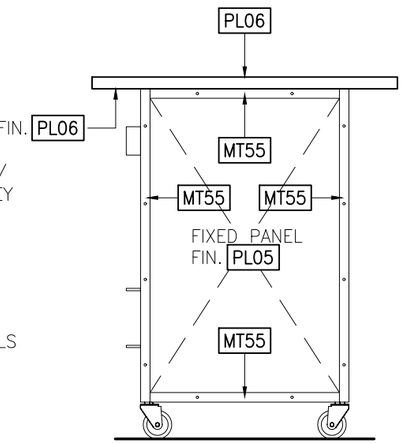

4/B236 SIDE ELEVATION
3/4" = 1'-0"

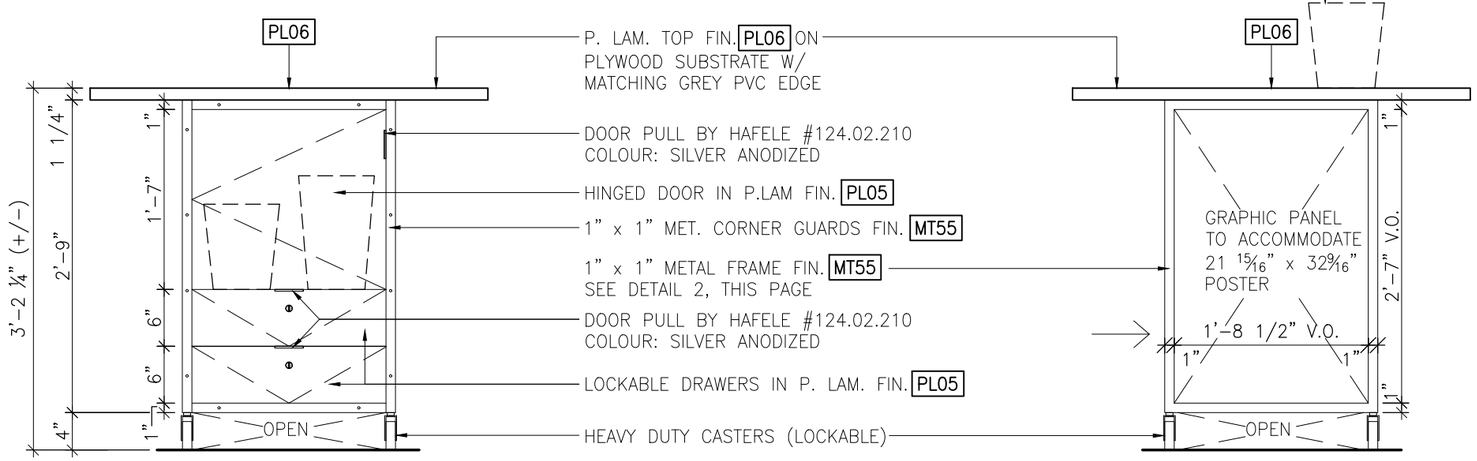

5/B236 REAR-ELEVATION
3/4" = 1'-0"

MILLWORK CONTRACTOR TO PROVIDE 2 WASTE RECEPTACLES WITHIN UNIT. CONFIRM DIMENSIONS PRIOR TO FABRICATION TO ENSURE THAT UNIT WILL ACCOMMODATE 2 RECEPTACLES (1 FOR ICE, 1 FOR DISCARDED PRODUCT)

6/B236 FRONT ELEVATION
3/4" = 1'-0"

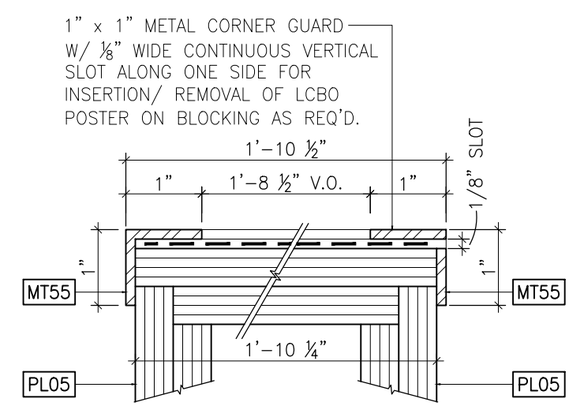

2/B236 DETAIL
6" = 1'-0"

LCBO	B200 GENERAL LIST	REVISION DATE	REV.	1 of 1	ISSUE DATE	STORE TYPE	STORE #
	PORTABLE TASTING BAR	2019 NOV	01	B236	2019 NOV		312

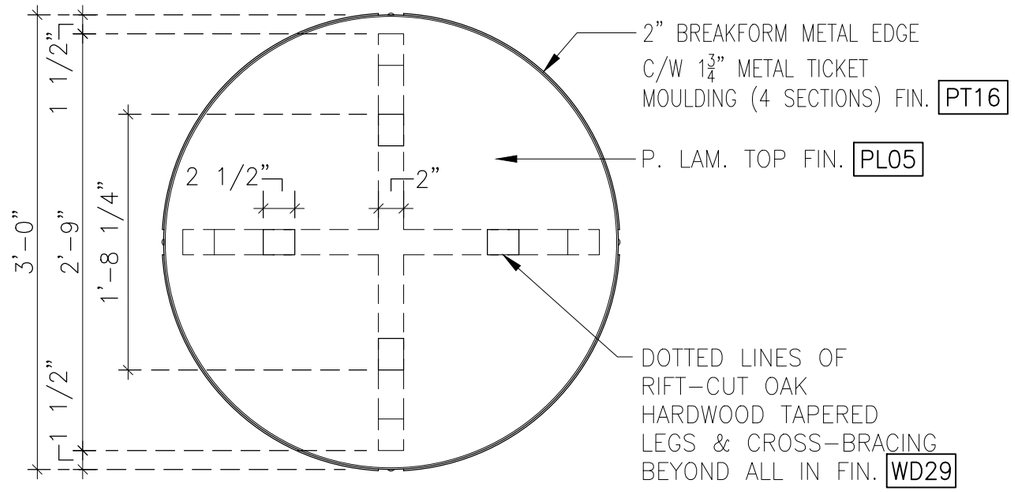

1 B243 PLAN
1"=1'-0"

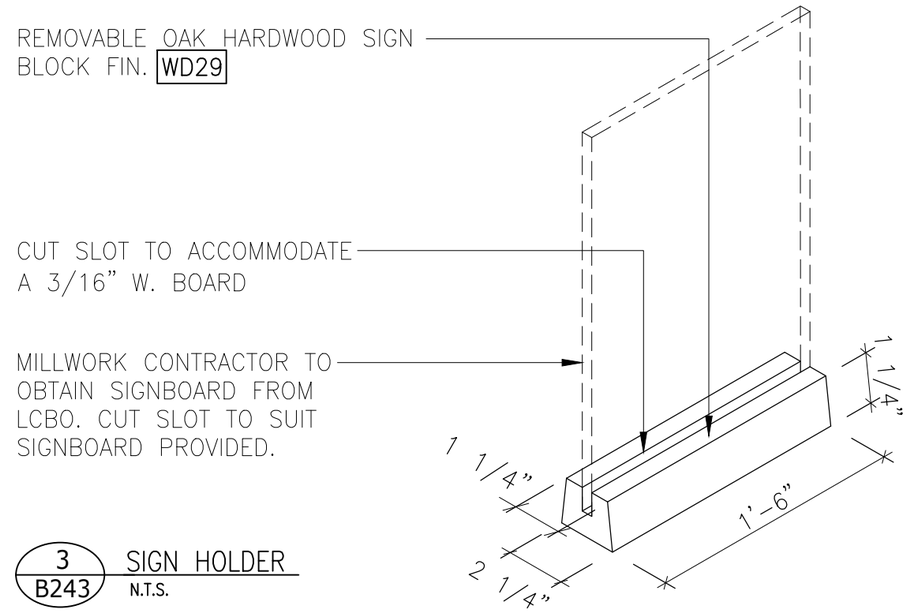

3 B243 SIGN HOLDER
N.T.S.

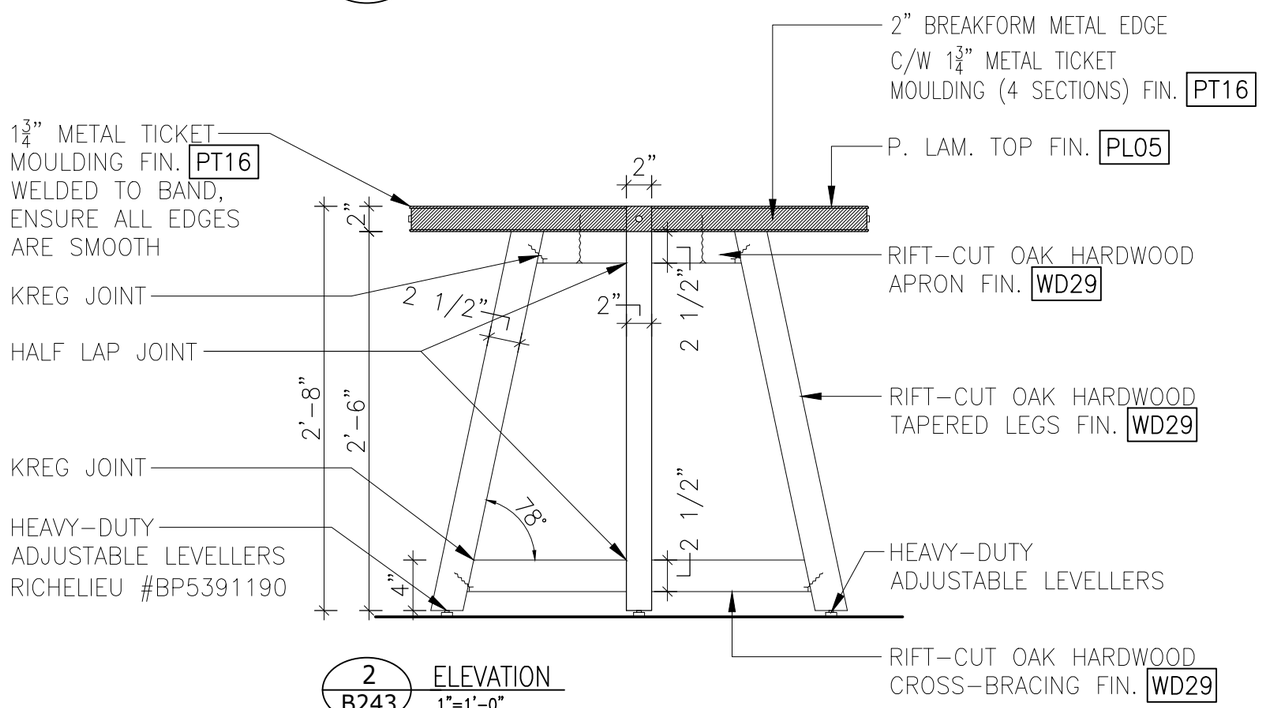

2 B243 ELEVATION
1"=1'-0"

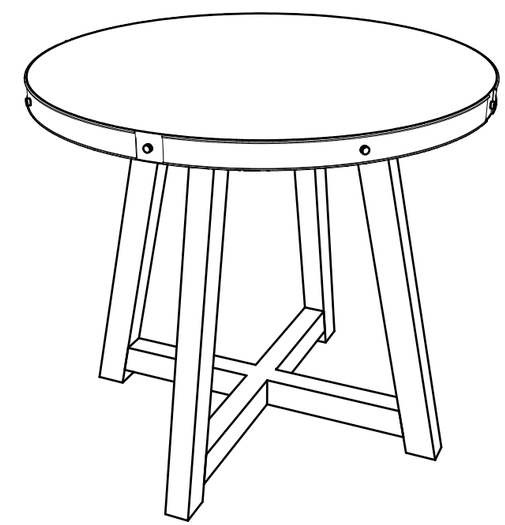

4 B243 ISOMETRIC
N.T.S.

LCBO	B200 GENERAL LIST	REVISION DATE	REV.	1 of 1	ISSUE DATE	STORE TYPE	STORE #
	3'-0" DIA. ENTRANCE TABLE	2019 NOV	01	B243	2019 NOV		312

NOTE:
SOLID WOOD GRADE TO BE FAS

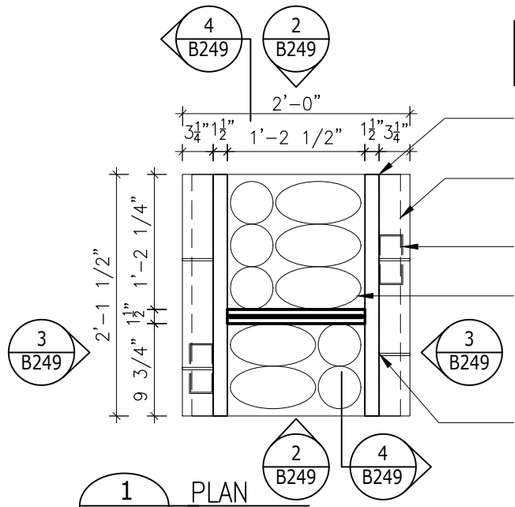

1/2" x 1½" SOLID WOOD EDGES ON ALL GABLES FIN. WD29

DOTTED LINE OF REMOVABLE GIFT CARD DISPLAY AT TOP

PAPER BAGS IN WIRE BAG HOLDER

GIFT BOXES ON ADJ. P. LAM. SHELVES FIN. PL04 W/ HARDWOOD TICKET MOULDINGS FIN. WD29

P. LAM. CLAD SLATWALL FIN. PL04 C/W CUSTOM FACE-OUT HARDWARE ON ENDS FOR FLAT BOXES & BAGS

1 B249 PLAN
3/4" = 1'-0"

ALL METAL HARDWARE TO BE FIN. PT16 (BLACK)

ENSURE NEW SHELF SPACING ALLOWS FOR ADEQUATE CLEARANCE WITH NEW TICKET MOULDING

SHELVING ACCESSORIES	
ITEM	QTY
ACRYLIC HOLDER	2
HOOKS (TBD)	6
WIRE BAG HOLDER	4

NOTE:
GIFT PACKAGING & GIFT CARDS TO BE SUPPLIED & INSTALLED BY LCBO

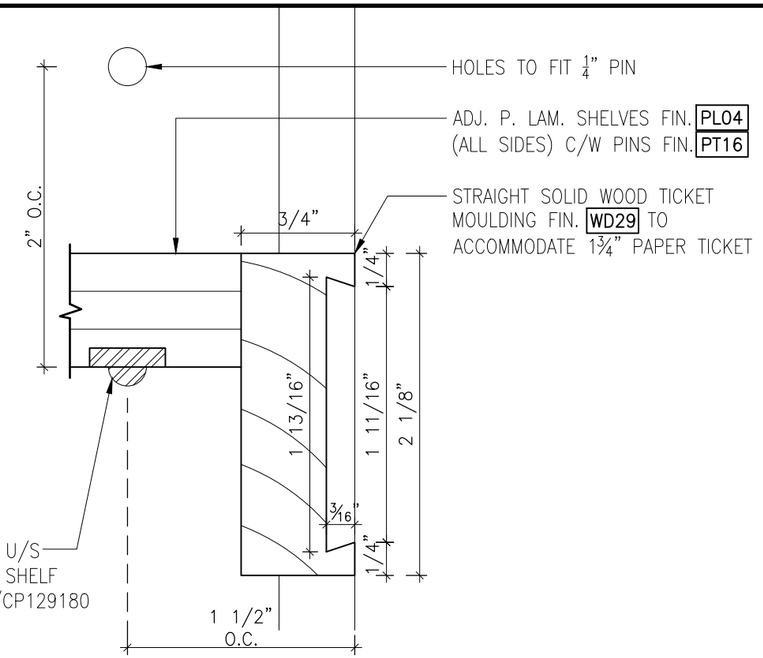

HOLES TO FIT ¼" PIN

ADJ. P. LAM. SHELVES FIN. PL04 (ALL SIDES) C/W PINS FIN. PT16

STRAIGHT SOLID WOOD TICKET MOULDING FIN. WD29 TO ACCOMMODATE 1¾" PAPER TICKET

PROVIDE CUT-OUT TO U/S OF SHELF FOR METAL SHELF SUPPORT #CP128180/CP129180 BY RICHELIEU

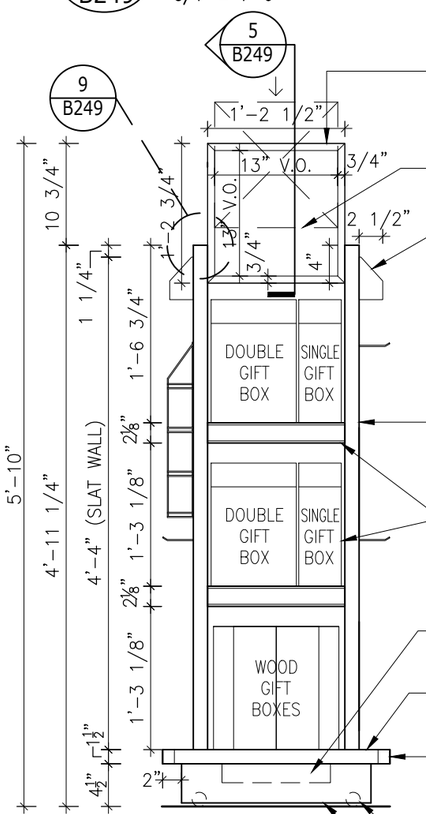

SLATWALL TO START @ TOP OF FIXTURE, SEE DETAIL 9/B249

PROVIDE SLOT IN TOP OF FRAME FOR 13.75" x 13.75" GRAPHIC INSERT

DOTTED LINE OF DIVIDER PANEL

SIGNAGE INSERT IN WOOD FRAME FIN. WD29 (TOP LOADED)

REMOVABLE CLEAR ACRYLIC GIFT CARD & ENVELOPE DISPLAY C/W CLEAR ACRYLIC DIVIDERS AND METAL CHANNEL W/ HANGERS FIN. PT16 SEE DETAIL 5/B249

P. LAM. CLAD SLATWALL FIN. PL04 C/W CUSTOM FACE-OUT HARDWARE FOR BOXES

GIFT BOXES ON ADJ. P. LAM. SHELVES FIN. PL04 C/W PINS FIN. PT16 AND WOOD TICKET MOULDING FIN. WD29

WEIGHTED @ CENTRE OF FIXTURE UNDERSIDE

P. LAM. BASE FIN. PL04 W/ HARDWOOD EDGE FIN. WD29

APPLIED METAL CORNER GUARD FIN. MT55

PROVIDE HEAVY DUTY CASTERS TO U/S OF KICKBASE

RECESSED METAL KICKBASE FIN. PL04

2 B249 ELEVATION
3/4" = 1'-0"

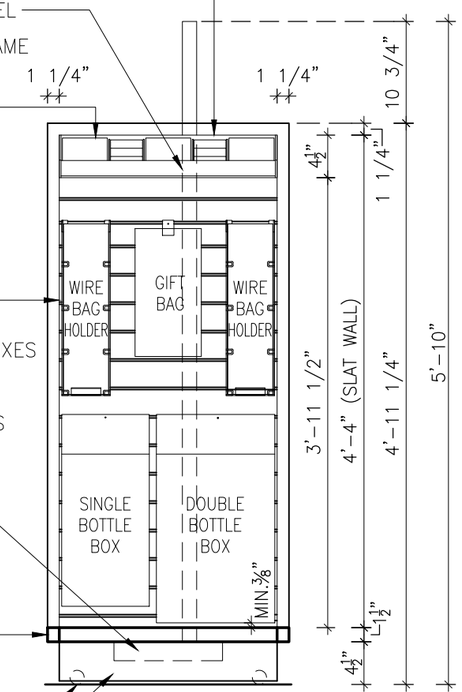

3 B249 ELEVATION
3/4" = 1'-0"

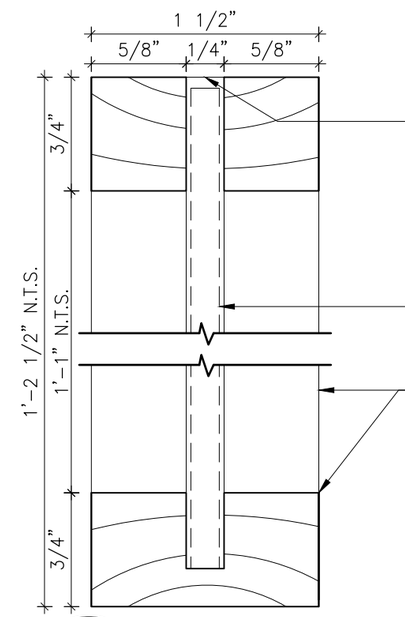

PROVIDE ¼" SLOT IN TOP OF FRAME FOR GRAPHIC INSERT

DOTTED LINES OF 13.75" x 13.75" DOUBLE-SIDED GRAPHIC INSERT

¾" x 1 ½" WOOD FRAME FIN. WD29 W/ ¼" SLOT FOR GRAPHIC INSERT

5 B249 SECTION
FULL SCALE

NOTE:
ALL CONSTRUCTION MDF UNLESS OTHERWISE NOTED.

NOTE:
ALL HOOKS (6) FIN. PT16 FOR GIFT BAGS AND WIRE BAG HOLDERS (4) BY METAL CREATIONS. ALL OTHER COMPONENTS (I.E. ACRYLIC HOLDER) TO BE SUPPLIED AND INSTALLED BY MILLWORK CONTRACTOR.

METAL CREATIONS
465 SIGNET DRIVE
WESTON, ONTARIO
T: (416) 744-8801

LCBO	B200 GENERAL LIST	REVISION DATE	REV.	1 of 2	ISSUE DATE	STORE TYPE	STORE #
	GIFT PACKAGING FIXTURE	2019 NOV	01	B249	2019 NOV		312

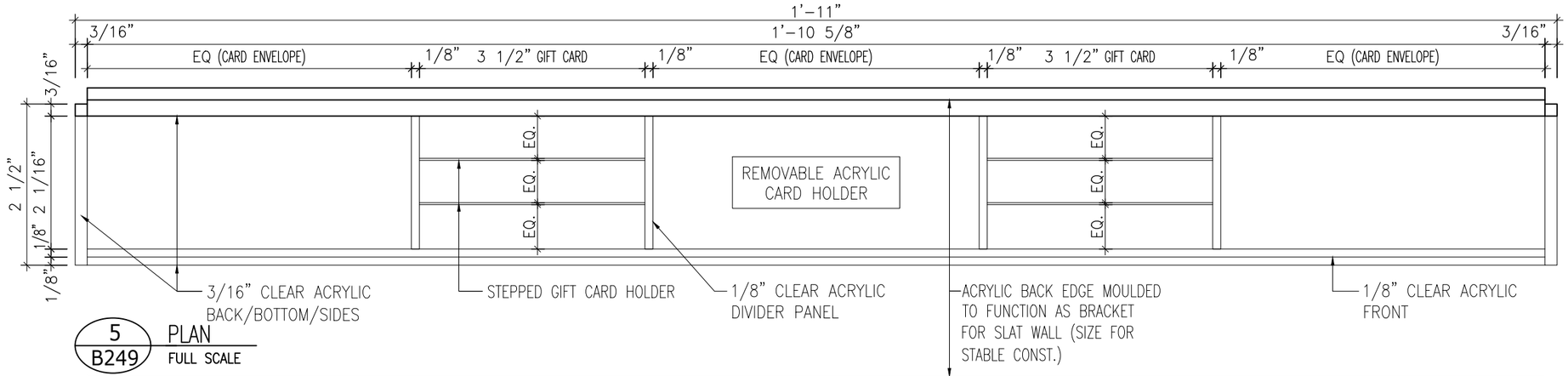

5 B249 PLAN
FULL SCALE

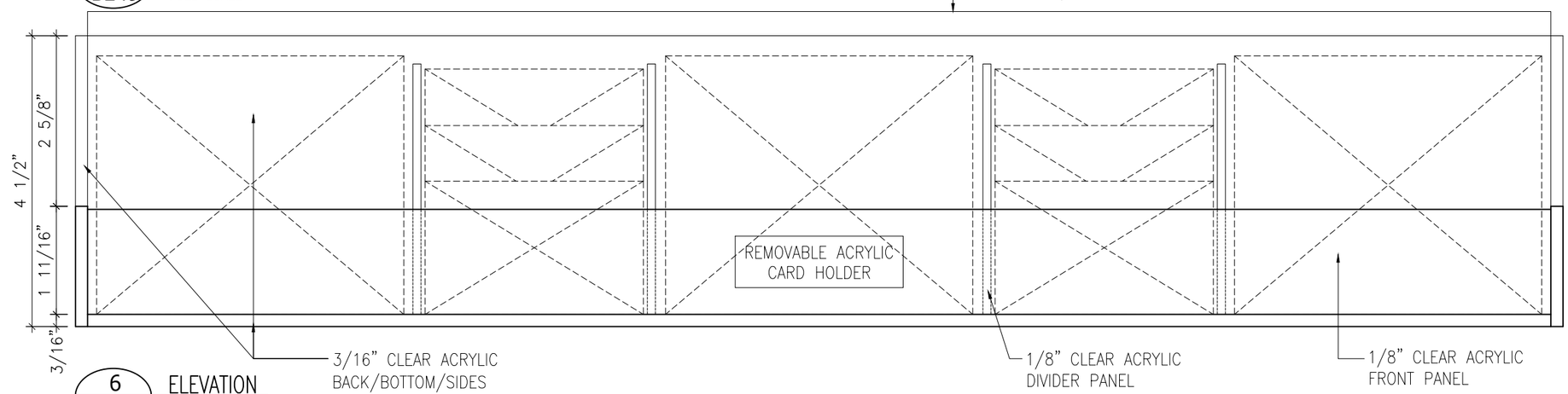

6 B249 ELEVATION
FULL SCALE

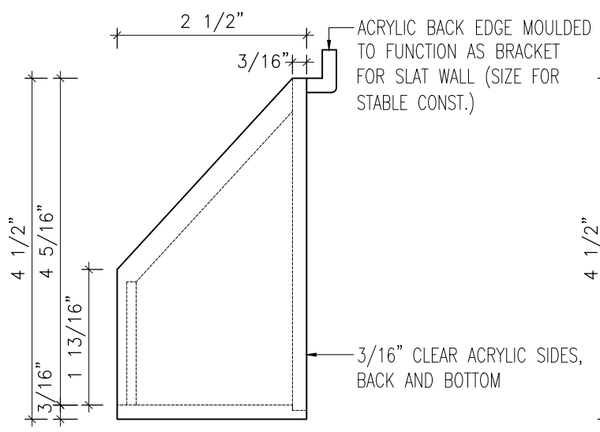

7 B249 SIDE ELEVATION
FULL SCALE

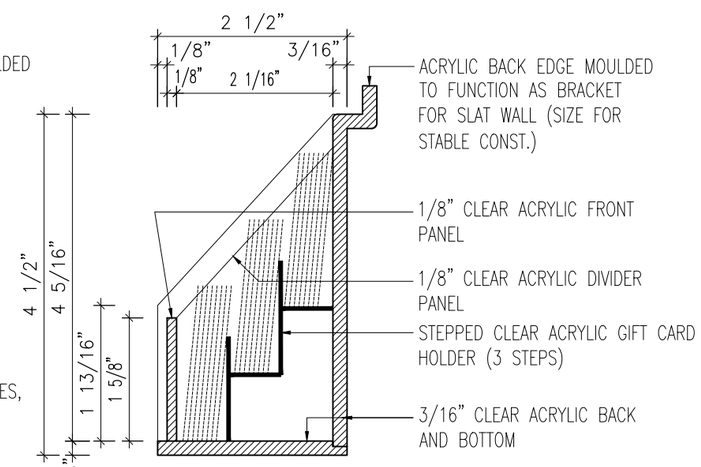

8 B249 SECTION
FULL SCALE

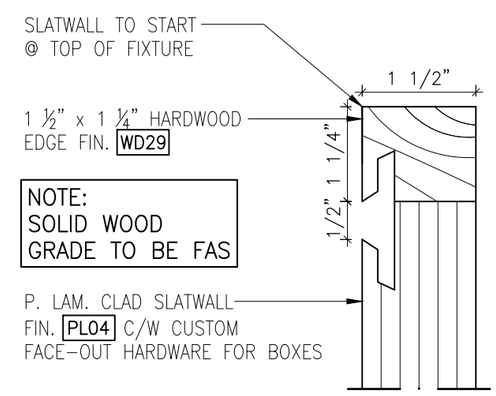

9 B249 DETAIL
FULL SCALE

LCBO	B200 GENERAL LIST	REVISION DATE	REV.	2 of 2	ISSUE DATE	STORE TYPE	STORE #
	GIFT PACKAGING FIXTURE	2019 NOV	01	B249	2019 NOV		312

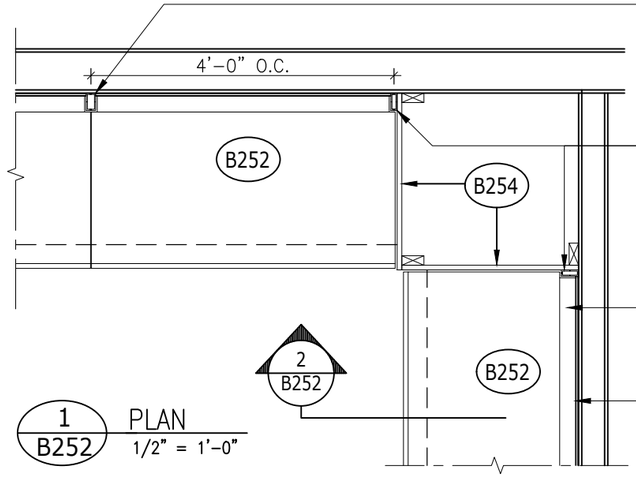

1 / B252 PLAN
1/2" = 1'-0"

2 3/4" x 1 1/2" x 7'-6" HIGH HEAVY DUTY SLOTTED METAL POST (SLOTS AT 1" O.C. TYP.) FIN. PT16

ALL END POSTS TO BE MODIFIED AS REQUIRED TO ENSURE THAT THERE ARE NO GAPS BETWEEN METAL SHELVES AND END GABLES (FILLER STRIPS ARE NOT ACCEPTABLE)

FRICTION-FIT METAL FILLER STRIP FIN. PT16 BETWEEN POSTS (APPROXIMATELY 2 ¼" DP.)

FULL HEIGHT MASONITE BACK PANEL BETWEEN POSTS TO MATCH FIN. PL04 LOCATED AT REAR EDGE OF POSTS IN ORDER TO MAXIMIZE PRODUCT CAPACITY (BY METAL SHELVING SUPPLIER)

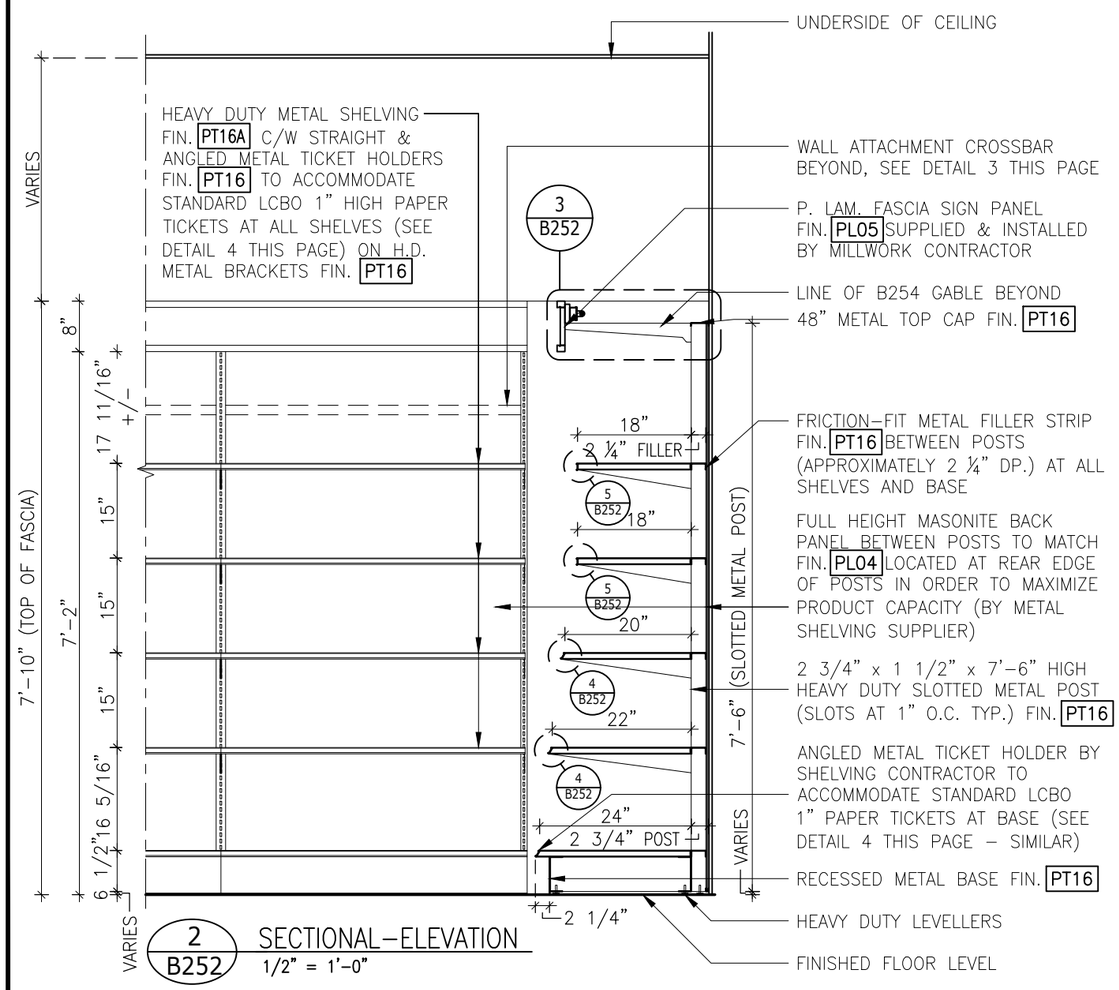

2 / B252 SECTIONAL-ELEVATION
1/2" = 1'-0"

UNDERSIDE OF CEILING

HEAVY DUTY METAL SHELVING FIN. PT16A C/W STRAIGHT & ANGLED METAL TICKET HOLDERS FIN. PT16 TO ACCOMMODATE STANDARD LCBO 1" HIGH PAPER TICKETS AT ALL SHELVES (SEE DETAIL 4 THIS PAGE) ON H.D. METAL BRACKETS FIN. PT16

WALL ATTACHMENT CROSSBAR BEYOND, SEE DETAIL 3 THIS PAGE

P. LAM. FASCIA SIGN PANEL FIN. PL05 SUPPLIED & INSTALLED BY MILLWORK CONTRACTOR

LINE OF B254 GABLE BEYOND

48" METAL TOP CAP FIN. PT16

FRICTION-FIT METAL FILLER STRIP FIN. PT16 BETWEEN POSTS (APPROXIMATELY 2 ¼" DP.) AT ALL SHELVES AND BASE

FULL HEIGHT MASONITE BACK PANEL BETWEEN POSTS TO MATCH FIN. PL04 LOCATED AT REAR EDGE OF POSTS IN ORDER TO MAXIMIZE PRODUCT CAPACITY (BY METAL SHELVING SUPPLIER)

2 3/4" x 1 1/2" x 7'-6" HIGH HEAVY DUTY SLOTTED METAL POST (SLOTS AT 1" O.C. TYP.) FIN. PT16

ANGLED METAL TICKET HOLDER BY SHELVING CONTRACTOR TO ACCOMMODATE STANDARD LCBO 1" PAPER TICKETS AT BASE (SEE DETAIL 4 THIS PAGE – SIMILAR)

RECESSED METAL BASE FIN. PT16

HEAVY DUTY LEVELLERS

FINISHED FLOOR LEVEL

NOTE:
MILLWORK CONTRACTOR TO ENSURE THAT WOOD SIGN BAND IS TRUE AND LEVEL

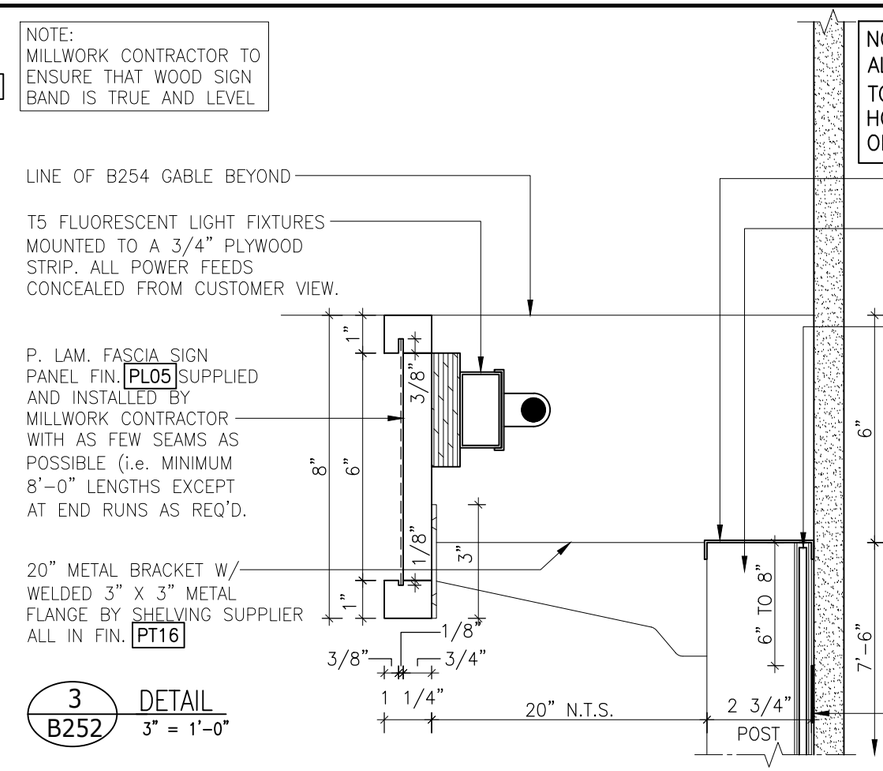

3 / B252 DETAIL
3" = 1'-0"

48" METAL TOP CAP FIN. PT16

2 3/4" x 1 1/2" x 7'-6" HIGH HEAVY DUTY SLOTTED METAL POST (SLOTS AT 1" O.C. TYP.) FIN. PT16

FULL HEIGHT MASONITE BACK PANEL BETWEEN POSTS TO MATCH FIN. PL04 LOCATED AT REAR EDGE TO POSTS IN ORDER TO MAXIMIZE PRODUCT CAPACITY (BY METAL SHELVING SUPPLIER)

HORIZONTAL WALL ATTACHMENT CROSSBAR CONCEALED BEHIND MASONITE PANEL SCREWED TO PARTITION. GC TO PROVIDE BLOCKING WITHIN PARTITION AS REQUIRED. WHEN BLOCKING WITHIN PARTITION IS NOT POSSIBLE, GC TO STRAP EXIST. WALL WITH ¾" THK. PLY, SECURED TO EXISTING STUDS.

NOTE:
ALL 1" METAL TICKET HOLDERS TO RECEIVE 1¾" PLASTIC TICKET HOLDER INSERT TO SPAN LENGTH OF SHELF SECTION

METAL SHELF FIN. PT16A

ANGLED METAL TICKET HOLDER OF 20 GAUGE STEEL FIN. PT16 WELDED TO SLOPE NOSE OF METAL SHELF EDGE

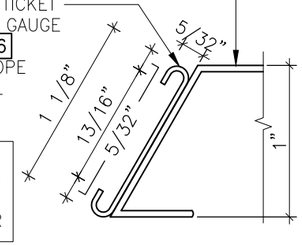

NOTE: NO VISIBILE HOLES IN FRONT OF TICKET HOLDER

4 / B252 ANGLED METAL TICKET HOLDER DETAIL
FULL SCALE

METAL SHELF FIN. PT16A

STRAIGHT METAL TICKET HOLDER OF 20 GAUGE STEEL FIN. PT16 WELDED TO SLOPE NOSE OF METAL SHELF EDGE

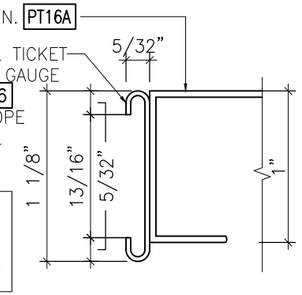

NOTE: NO VISIBILE HOLES IN FRONT OF TICKET HOLDER

5 / B252 STRAIGHT METAL TICKET HOLDER DETAIL
FULL SCALE

GENERAL NOTES
ALL DIMENSIONS INDICATED FROM FINISH FLOOR ARE TAKEN FROM THE HIGHEST FINISHED FLOOR ELEVATION OF THAT FLOOR SYSTEM

ALL ADJUSTMENTS TO COMPENSATE FOR NON-LEVEL FLOOR SURFACES TO BE MADE AT BOTTOM END OF POST

G.C. TO CO-ORDINATE MILLWORK + METAL SHELF INSTALLATION

SHELVING SUPPLIER RESPONSIBLE FOR INSTALLATION OF WALL STRAPPING AS REQUIRED

MILLWORK CONTRACTOR TO OBTAIN SIGNAGE SAMPLE FROM LCBO PRIOR TO FABRICATION TO ENSURE PROPER FIT OF SIGNAGE INSERT

SHELVES TO SUPPORT LOAD CAPACITY OF 500LBS

ALL END POSTS TO BE MODIFIED AS REQUIRED TO ENSURE THAT THERE ARE NO GAPS BETWEEN METAL SHELVES AND END GABLES (FILLER STRIPS ARE NOT ACCEPTABLE)

GENERAL NOTES
- DIMENSIONS SHOWN REFLECT SHELF & BASE DIMENSIONS ONLY & DO NOT TAKE METAL TICKET HOLDERS INTO ACCOUNT
- ALL ADJUSTMENTS TO COMPENSATE FOR NON-LEVEL FLOOR SURFACES TO BE MADE AT BOTTOM END OF POST
- GC TO CO-ORDINATE MILLWORK + METAL SHELF INSTALLATION
- T5 FLUORESCENT LIGHT FIXTURES TO BE SUPPLIED & INSTALLED BY G.C.
- GC RESPONSIBLE FOR INSTALLATION OF WALL STRAPPING AS REQ'D.
- MILLWORK CONTRACTOR TO OBTAIN SIGNAGE SAMPLE FROM LCBO PRIOR TO FABRICATION TO ENSURE PROPER FIT OF SIGNAGE INSERT
- SHELVING SUPPLIER TO OBTAIN 1" HIGH PAPER TICKET SAMPLE FROM LCBO PRIOR TO FABRICATION TO ENSURE PROPER FIT WITHIN TICKET MOULDING. SUBMIT SAMPLE FOR APPROVAL
- GC TO ENSURE ALL SHELVES ARE IN EXACT ALIGNMENT AND ARE TRUE & LEVEL. PERFORATED SHELVES ARE ACCEPTABLE. SHELVES TO SUPPORT LOAD CAPACITY OF 500LBS
- ALL END POSTS TO BE MODIFIED AS REQUIRED TO ENSURE THAT THERE ARE NO GAPS BETWEEN METAL SHELVES AND END GABLES (FILLER STRIPS ARE NOT ACCEPTABLE)

LCBO	B200 GENERAL LIST	REVISION DATE	REV.	1 of 1	ISSUE DATE	STORE TYPE	STORE #
	48" PERIM. MET. SHELVING UNIT w/ FASCIA & MET. TICKET MOULD. (7'-10" H.)	2019 NOV	01	B252	2019 NOV		312

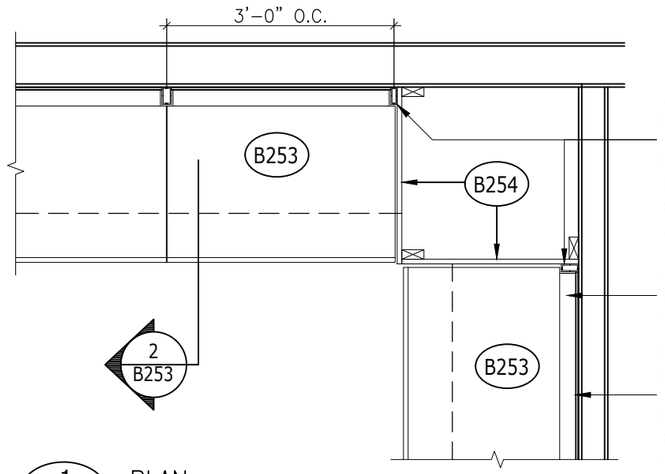

1 B253 PLAN
1/2" = 1'–0"

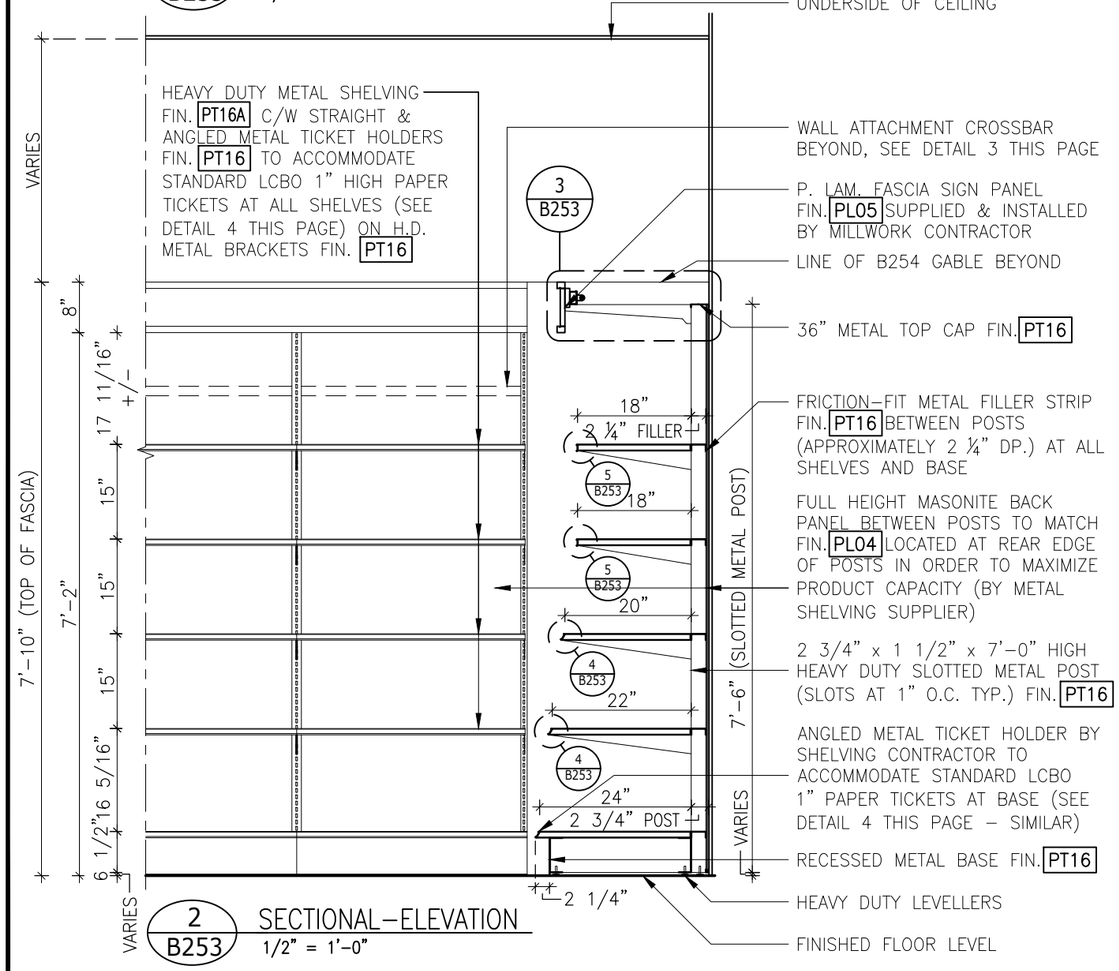

2 B253 SECTIONAL–ELEVATION
1/2" = 1'–0"

NOTE:
MILLWORK CONTRACTOR TO ENSURE THAT WOOD SIGN BAND IS TRUE AND LEVEL

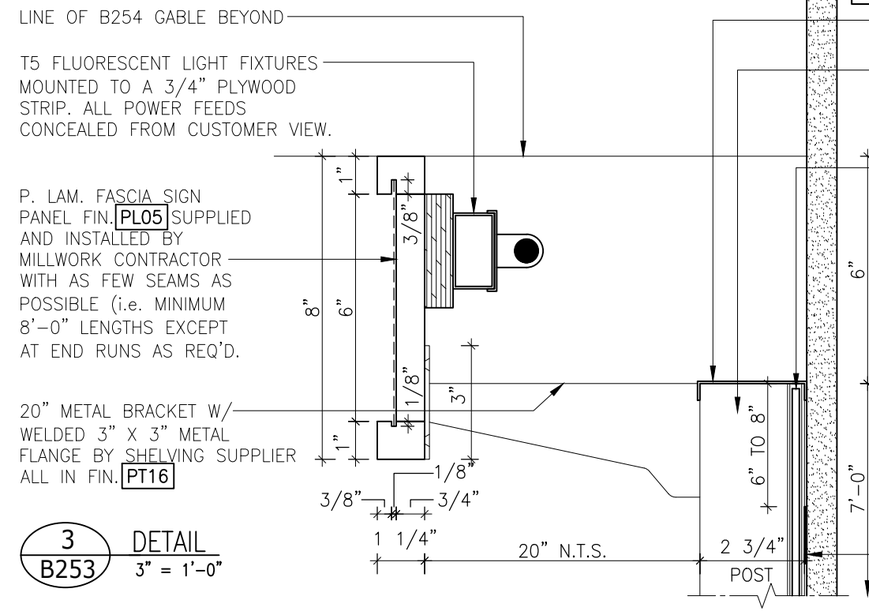

3 B253 DETAIL
3" = 1'–0"

NOTE:
ALL 1" METAL TICKET HOLDERS TO RECEIVE 1¾" PLASTIC TICKET HOLDER INSERT TO SPAN LENGTH OF SHELF SECTION

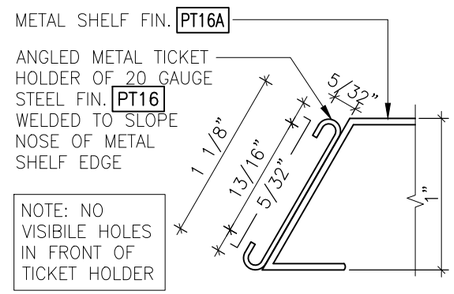

4 B253 ANGLED METAL TICKET HOLDER DETAIL
FULL SCALE

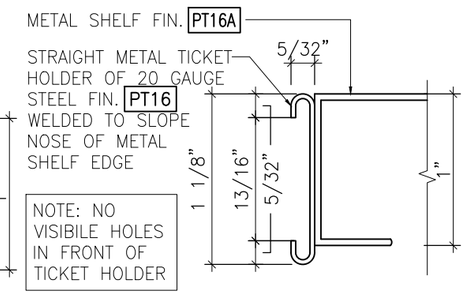

5 B253 STRAIGHT METAL TICKET HOLDER DETAIL
FULL SCALE

GENERAL NOTES
ALL DIMENSIONS INDICATED FROM FINISH FLOOR ARE TAKEN FROM THE HIGHEST FINISHED FLOOR ELEVATION OF THAT FLOOR SYSTEM

ALL ADJUSTMENTS TO COMPENSATE FOR NON–LEVEL FLOOR SURFACES TO BE MADE AT BOTTOM END OF POST

G.C. TO CO–ORDINATE MILLWORK + METAL SHELF INSTALLATION

SHELVING SUPPLIER RESPONSIBLE FOR INSTALLATION OF WALL STRAPPING AS REQUIRED

MILLWORK CONTRACTOR TO OBTAIN SIGNAGE SAMPLE FROM LCBO PRIOR TO FABRICATION TO ENSURE PROPER FIT OF SIGNAGE INSERT

SHELVES TO SUPPORT LOAD CAPACITY OF 500LBS

ALL END POSTS TO BE MODIFIED AS REQUIRED TO ENSURE THAT THERE ARE NO GAPS BETWEEN METAL SHELVES AND END GABLES (FILLER STRIPS ARE NOT ACCEPTABLE)

GENERAL NOTES
- DIMENSIONS SHOWN REFLECT SHELF & BASE DIMENSIONS ONLY & DO NOT TAKE METAL TICKET HOLDERS INTO ACCOUNT
- ALL ADJUSTMENTS TO COMPENSATE FOR NON–LEVEL FLOOR SURFACES TO BE MADE AT BOTTOM END OF POST
- GC TO CO–ORDINATE MILLWORK + METAL SHELF INSTALLATION
- T5 FLUORESCENT LIGHT FIXTURES TO BE SUPPLIED & INSTALLED BY G.C.
- GC RESPONSIBLE FOR INSTALLATION OF WALL STRAPPING AS REQ'D.
- MILLWORK CONTRACTOR TO OBTAIN SIGNAGE SAMPLE FROM LCBO PRIOR TO FABRICATION TO ENSURE PROPER FIT OF SIGNAGE INSERT
- SHELVING SUPPLIER TO OBTAIN 1" HIGH PAPER TICKET SAMPLE FROM LCBO PRIOR TO FABRICATION TO ENSURE PROPER FIT WITHIN TICKET MOULDING. SUBMIT SAMPLE FOR APPROVAL
- GC TO ENSURE ALL SHELVES ARE IN EXACT ALIGNMENT AND ARE TRUE & LEVEL. PERFORATED SHELVES ARE ACCEPTABLE. SHELVES TO SUPPORT LOAD CAPACITY OF 500LBS
- ALL END POSTS TO BE MODIFIED AS REQUIRED TO ENSURE THAT THERE ARE NO GAPS BETWEEN METAL SHELVES AND END GABLES (FILLER STRIPS ARE NOT ACCEPTABLE)

LCBO	B200 GENERAL LIST	REVISION DATE	REV.	1 of 1	ISSUE DATE	STORE TYPE	STORE #
	36" PERIM. MET. SHELVING UNIT w/ FASCIA & MET. TICKET MOULD. (7'-10" H.)	2019 NOV	01	B253	2019 NOV		312

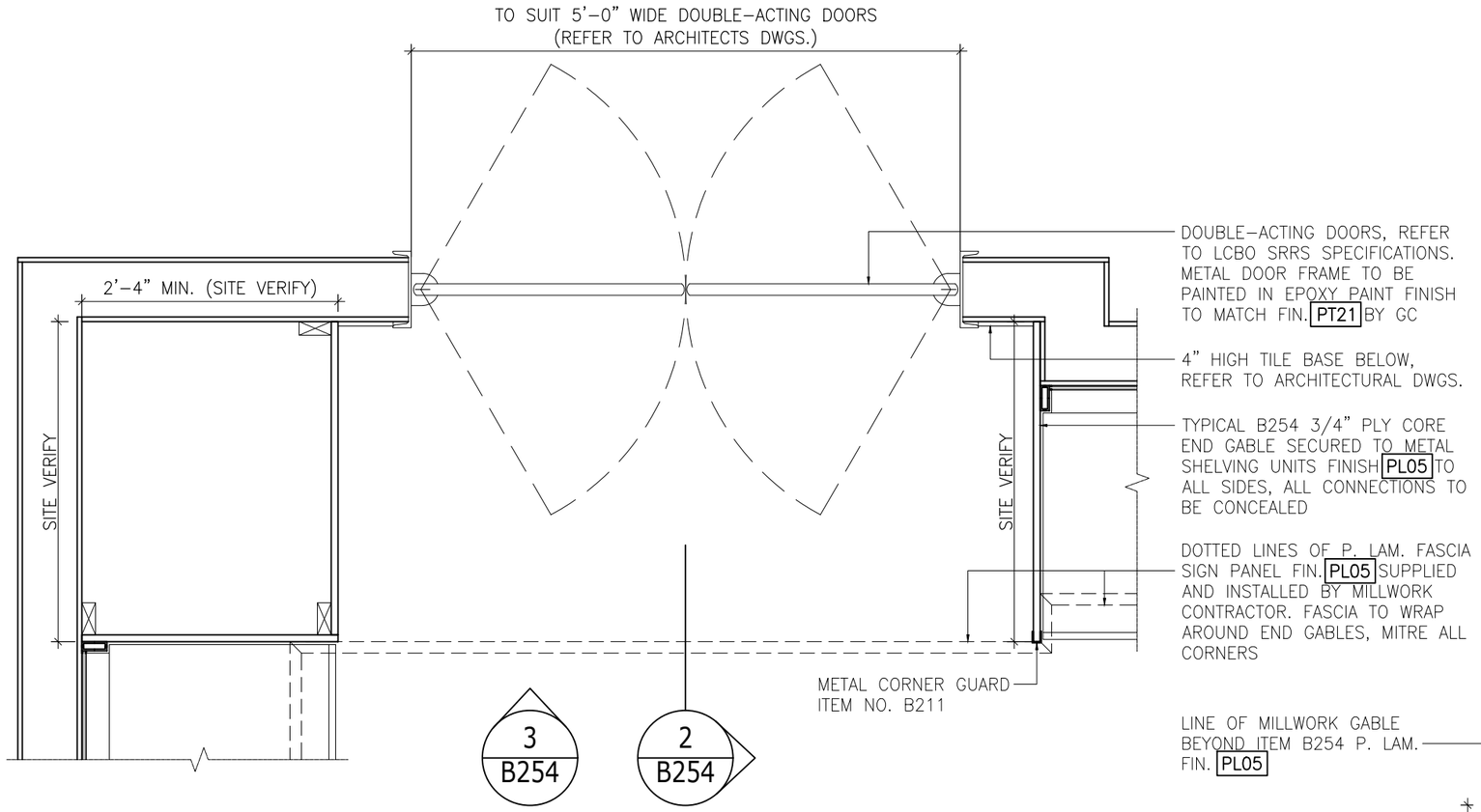

1 B254 PLAN
3/4" = 1'-0"

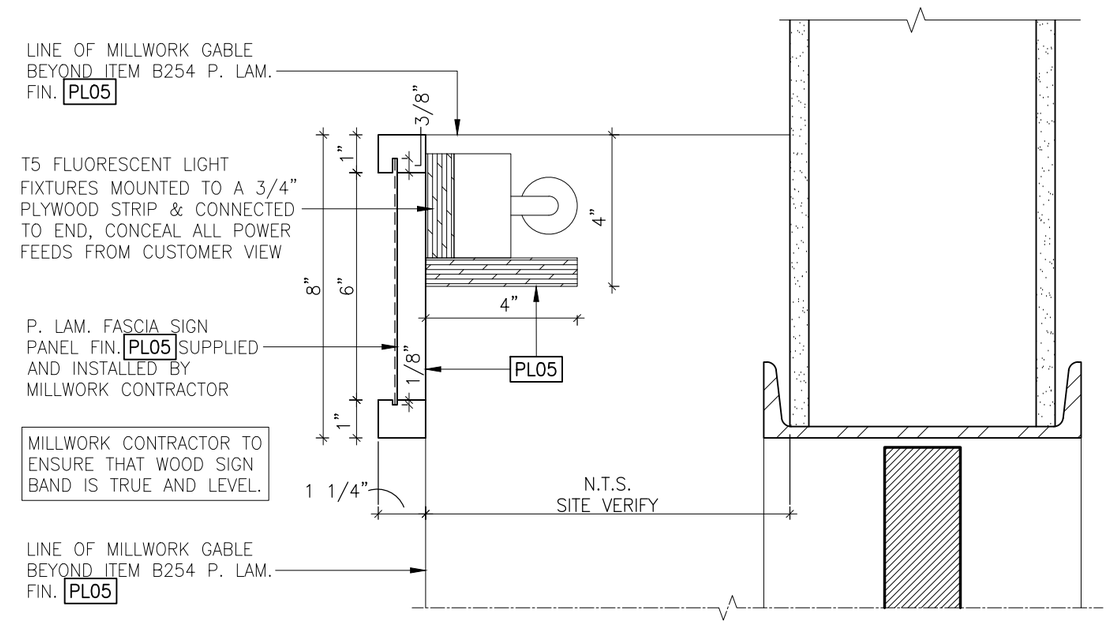

2 B254 DETAIL
3" = 1'-0"

LCBO	B200 GENERAL LIST	REVISION DATE	REV.	1 of 2	ISSUE DATE	STORE TYPE	STORE #
	PERIMETER SHELVING GABLE/FILLER PANEL (7'-10" H.)	2019 NOV	01	B254	2019 NOV		312

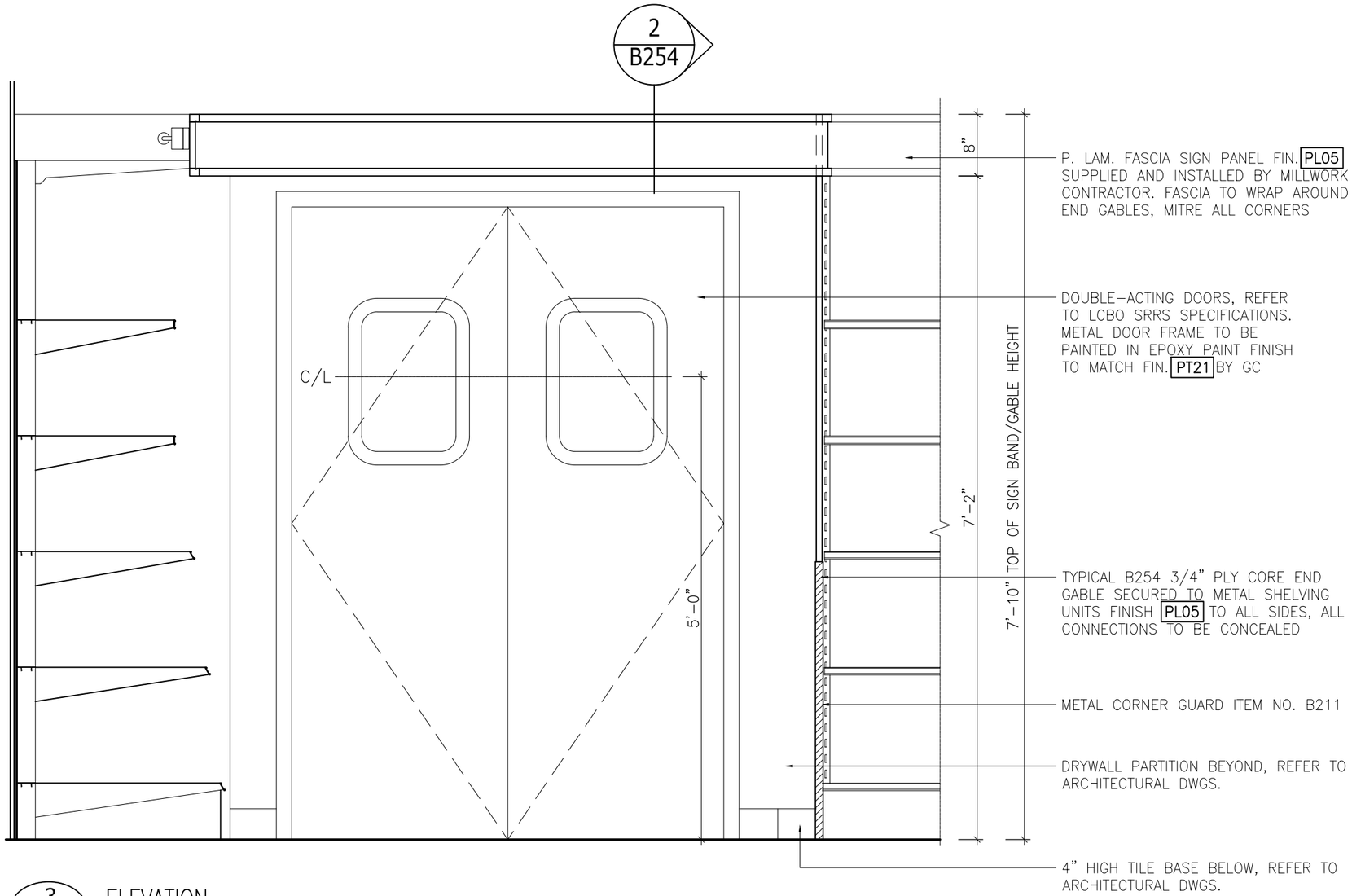

3
B254
ELEVATION
3/4" = 1'=0"

LCBO	B200 GENERAL LIST	REVISION DATE	REV.	2 of 2	ISSUE DATE	STORE TYPE	STORE #
	PERIMETER SHELVING GABLE/FILLER PANEL (7'-10" H.)	2019 NOV	01	B254	2019 NOV		312

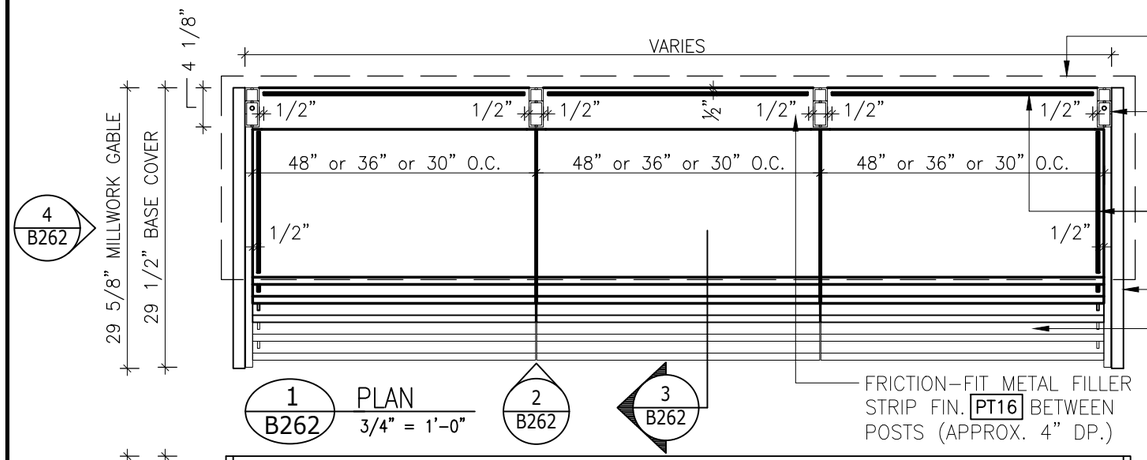

1 B262 PLAN 3/4" = 1'-0"

2 B262 3 B262

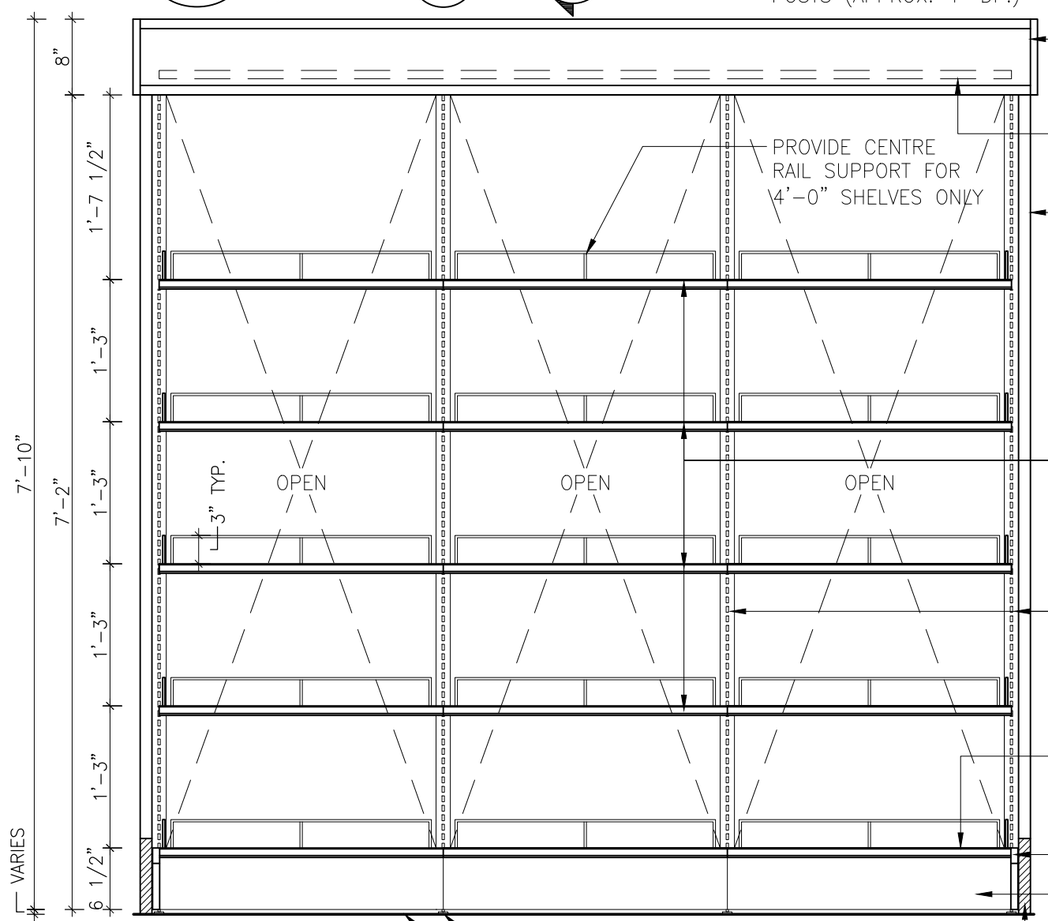

2 B262 ELEVATION 3/4" = 1'-0"

HEAVY DUTY LEVELLERS

FINISHED FLOOR LEVEL

DOTTED LINES OF BREAKFORM METAL SIGNBAND ABOVE

4 1/8" x 1 1/2" x 7'-9" HIGH HEAVY DUTY SLOTTED METAL POST (SLOTS AT 1" O.C. TYP.) C/W CONTINUOUS FULL HEIGHT METAL CAP DETAIL TO BOTH SIDES OF POSTS TO CONCEAL WELDS, ALL IN FIN. PT16 (TYPICAL AT ALL POSTS)

1/4" SQ. METAL RAIL FIN. PT16. PRE-DRILL ALL HOLES IN SHELVES FOR METAL RAILS

1 1/4" THK. TAPERED METAL GABLE PT. FIN. PT16

HEAVY DUTY METAL SHELVING FIN. PT16A C/W STRAIGHT & ANGLED METAL TICKET HOLDERS FIN. PT16 TO ACCOMMODATE 1¾" PLASTIC TICKET HOLDERS (SEE DETAIL 6 & 7, B262) ON H.D. METAL BRACKETS FIN. PT16

FRICTION-FIT METAL FILLER STRIP FIN. PT16 BETWEEN POSTS (APPROX. 4" DP.)

8" HIGH BREAKFORM METAL SIGNBAND PT. FIN. PT16 TO WRAP ALL SIDES OF POSTS. NO VISIBLE CONNECTORS/FASTENERS

T5 FLUORESCENT LIGHT FIXTURE SUPPLIED + INSTALLED BY GC. MOUNTED TO BACK SIDE OF SIGN BAND (END TO END). FEED POWER WITHIN METAL POST AS REQ'D.

PROVIDE CENTRE RAIL SUPPORT FOR 4'-0" SHELVES ONLY

1 1/4" THK. TAPERED METAL GABLE PT. FIN. PT16

FRICTION-FIT METAL FILLER STRIP FIN. PT16 BETWEEN POSTS (APPROXIMATELY 4" DP.) AT ALL SHELVES AND BASE

HEAVY DUTY METAL SHELVING FIN. PT16A C/W STRAIGHT & ANGLED METAL TICKET HOLDERS FIN. PT16 TO ACCOMMODATE 1¾" PLASTIC TICKET HOLDERS (SEE DETAIL 6 & 7, B262) ON H.D. METAL BRACKETS FIN. PT16

4 1/8" x 1 1/2" x 7'-9" HIGH HEAVY DUTY SLOTTED METAL POST (SLOTS AT 1" O.C. TYP.) C/W CONTINUOUS FULL HEIGHT METAL CAP DETAIL TO BOTH SIDES OF POSTS TO CONCEAL WELDS, ALL IN FIN. PT16 (TYPICAL AT ALL POSTS)

ANGLED METAL TICKET HOLDER BY SHELVING CONTRACTOR TO ACCOMMODATE 1¾" PLASTIC TICKET HOLDERS AT BASE (SEE DETAIL 6, B262-SIMILAR)

SIDE BASE COVER PLATES PT. FIN. PT16

RECESSED METAL BASE FIN. PT16

METAL BASE TO WRAP METAL GABLE PT. FIN. PT16 (DENOTED BY HATCHING)

3" HIGH METAL RAILS (FOR SHELVES)	
SHELF LENGTH	HOLE SPACING
36"	32" O.C.
48"	44" O.C.
SHELF DEPTH	HOLE SPACING
16"	14" O.C.
18"	16" O.C.
20"	18" O.C.
22"	20" O.C.
24"	22" O.C.

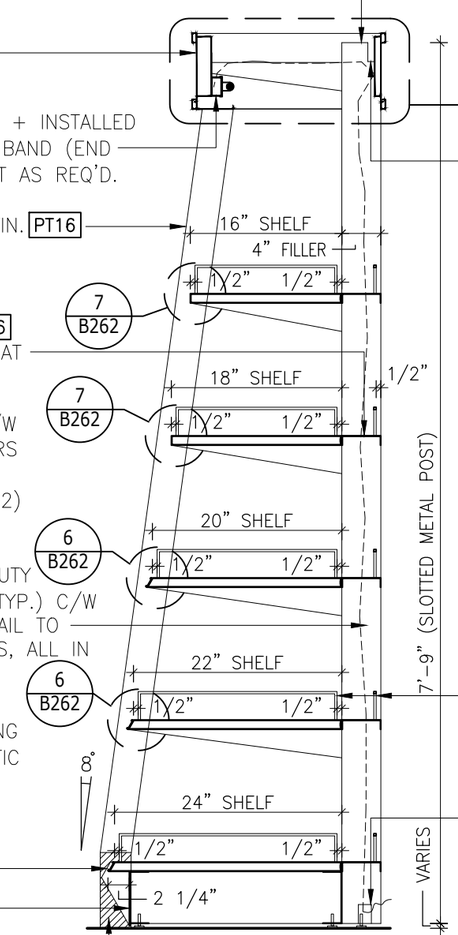

3 B262 SECTION 3/4" = 1'-0"

SHELVING SUPPLIER TO INSTALL METAL TOP CAP TO POSTS FOR ANCHORING OF METAL CANOPY

5 B262

CUT-OUT IN METAL POST FOR CONCEALED POWER FEED

NOTE:
ALL COMPONENTS SUPPLIED BY METAL SHELVING SUPPLIER INCLUDING TOP SIGNAGE CANOPY.

NOTE:
ALL 1" METAL TICKET HOLDERS TO RECEIVE 1¾" PLASTIC TICKET HOLDER INSERT TO SPAN LENGTH OF SHELF SECTION

1/4" SQ. METAL RAIL FIN. PT16. SHELVING SUPPLIER TO PRE-DRILL HOLES FOR METAL RAILS LOCATED AT 2 OUTER ENDS AND ACROSS REAR EDGE OF ALL SHELVES AS SHOWN.

CUT-OUT IN METAL POST FOR CONCEALED POWER FEED

LCBO	B200 GENERAL LIST	REVISION DATE	REV.	1 of 2	ISSUE DATE	STORE TYPE	STORE #
	DOUBLE SIDED GIFT/SPIRITS FIXTURE WITH METAL SHELVES (ILLUMINATED) (7'-10" H.)	2019 NOV	01	B262	2019 NOV		312

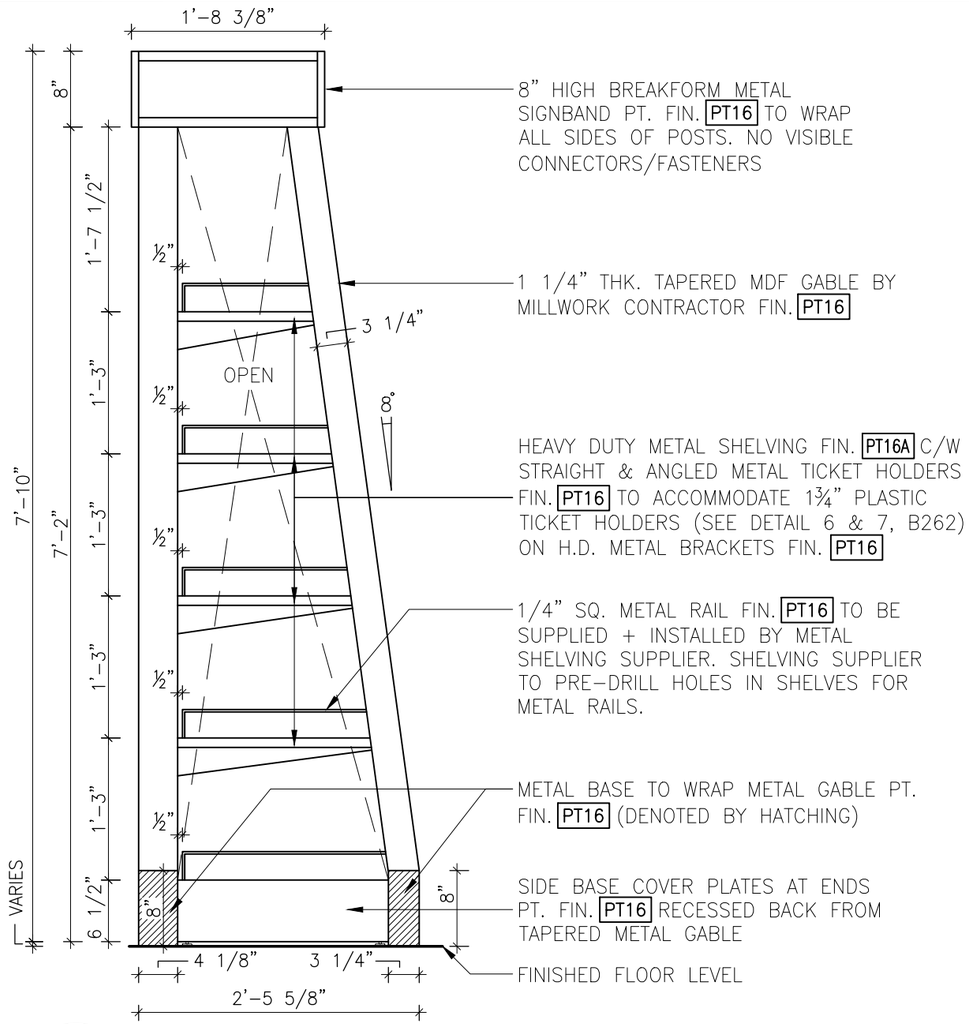

4 / B262 ELEVATION
3/4" = 1'-0"

NOTE:
ALL COMPONENTS SUPPLIED BY METAL SHELVING SUPPLIER INCLUDING TOP SIGNAGE CANOPY.

NOTE:
METAL SHELVING SUPPLIER TO ENSURE THAT FIXTURE IS CONSTRUCTED SO THAT LIGHT FIXTURES CAN BE SERVICED AND/OR REMOVED WITHOUT DISMANTLING FIXTURE

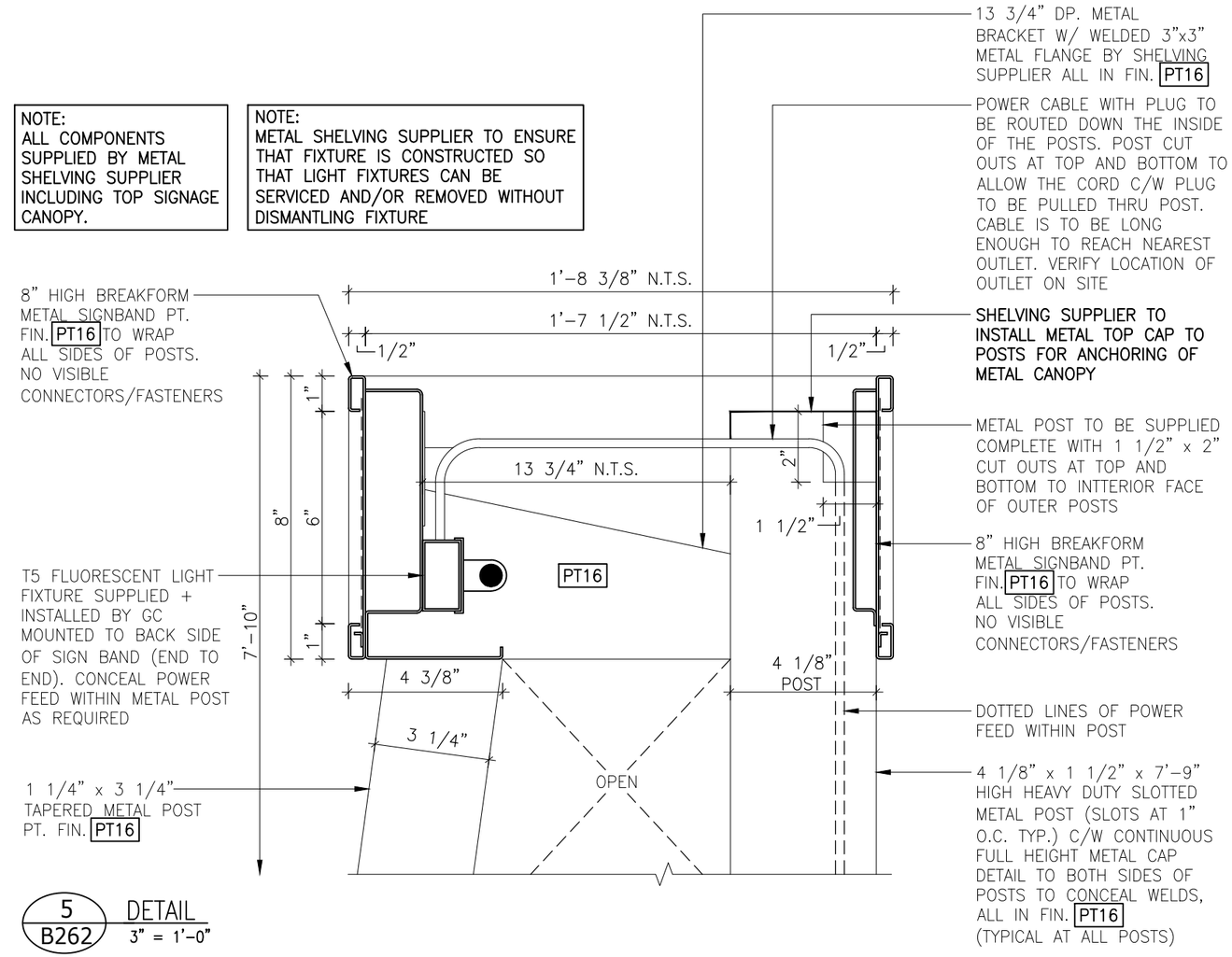

5 / B262 DETAIL
3" = 1'-0"

GENERAL NOTES

- DIMENSIONS SHOWN REFLECT SHELF & BASE DIMENSIONS ONLY & DO NOT TAKE METAL TICKET HOLDERS INTO ACCOUNT
- ALL ADJUSTMENTS TO COMPENSATE FOR NON-LEVEL FLOOR SURFACES TO BE MADE AT BOTTOM END OF POST
- GC TO CO-ORDINATE METAL SHELF INSTALLATION
- METAL SHELVING SUPPLIER TO OBTAIN SIGNAGE SAMPLE FROM LCBO PRIOR TO FABRICATION TO ENSURE PROPER FIT OF SIGNAGE INSERT
- ENSURE ALL SHELVES ARE IN EXACT ALIGNMENT AND ARE TRUE & LEVEL. PERFORATED SHELVES ARE NOT ACCEPTABLE. SHELVES TO SUPPORT LOAD CAPACITY OF 500LBS
- ALL METAL SHELVING COMPONENTS TO BE SUPPLIED TO SHELVING SUPPLIER. METAL SHELVING SUPPLIER RESPONSIBLE FOR FINAL ASSEMBLY ON-SITE.

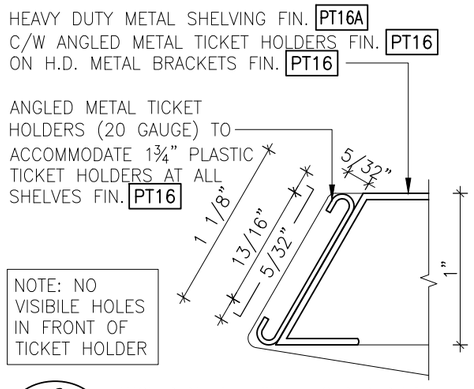

6 / B262 ANGLED METAL TICKET HOLDER DETAIL
FULL SCALE

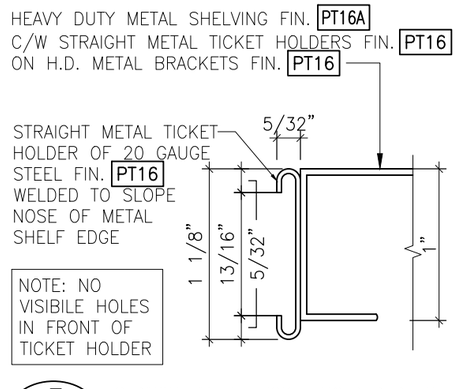

7 / B262 STRAIGHT METAL TICKET HOLDER DETAIL
FULL SCALE

LCBO	B200 GENERAL LIST	REVISION DATE	REV.	2 of 2	ISSUE DATE	STORE TYPE	STORE #
	DOUBLE SIDED GIFT/SPIRITS FIXTURE WITH METAL SHELVES (ILLUMINATED) (7'-10" H.)	2019 NOV	01	B262	2019 NOV		312

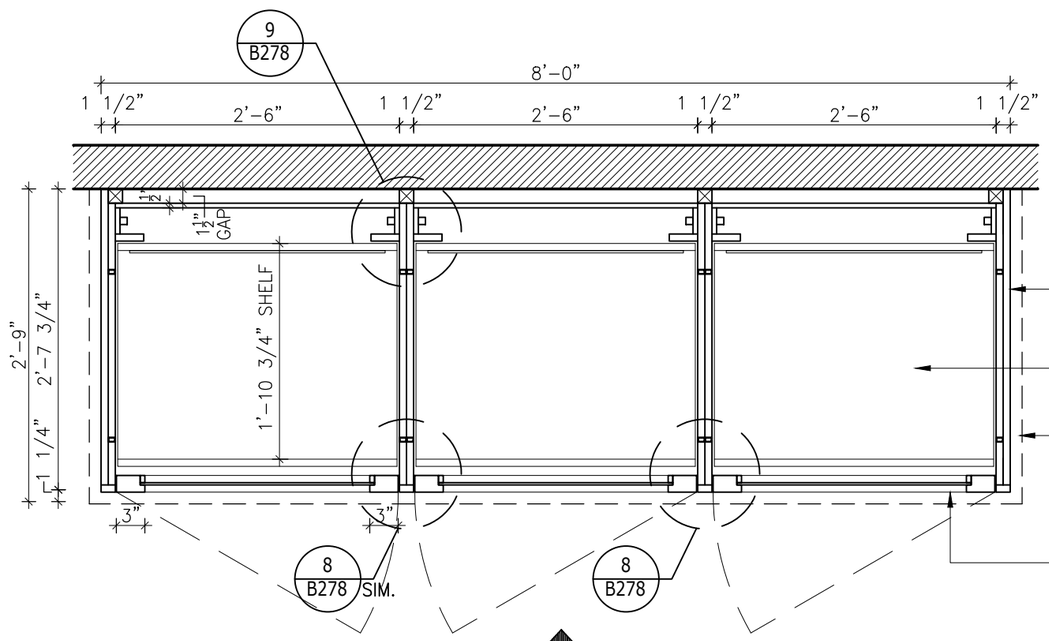

NOTE:
SOLID WOOD GRADE TO BE FAS

NOTE:
LOCKS FOR B268, B269, B270, B276, B277, B278, B307, B358, B359 & B360 TO BE KEYED ALIKE

P. LAM. FIN. PL05 TO SIDE (GRAIN DIRECTION TO RUN VERTICALLY)

ADJ. P. LAM. SHELVES FIN. PL01 W/ WOOD TICKET MOULDING FIN. WD29

DOTTED LINES OF 3/4" THK. PARTICLE BOARD SIGN BAND FIN. PL05 W/ HARDWOOD EDGES FIN. WD29 & CONCEALED FLUORESCENT LIGHTING, SEE DETAIL 4/B278

1 3/4" THK. LOCKABLE WOOD FRAMED DOOR FIN. WD29 W/ 3/8" (10mm) THK. CLEAR TEMPERED GLASS INSERT W/ RICHELIEU HANDLE #458160195, SEE THIS PAGE FOR ADDITIONAL HARDWARE SPECS.

NOTE:
ALL WOOD TICKET MOULDINGS TO ACCOMMODATE 1¾" PAPER TICKET

NOTE:
MILLWORK CONTRACTOR TO ENSURE THAT FIXTURE IS CONSTRUCTED SO THAT LIGHT FIXTURES CAN BE SERVICED AND/OR REMOVED WITHOUT DISMANTLING MILLWORK

GENERAL NOTES:
ALL VERTICAL SURFACES ON THE INTERIOR (GABLES, BACK PANELS, AND DIVIDERS) ARE TO BE CONSTRUCTED OF PREFINISHED PARTICLE BOARD PANELS W/ MELAMINE FIN. PL01 BOTH SIDES. MILLWORK CONTRACTOR TO PROVIDE HARDWOOD EDGE IN FIN. WD29 TO ALL EXPOSED EDGES.

NOTE:
MILLWORK CONTRACTOR TO PROVIDE (1) COAT OF URETHANE SEALER AND (2) TOP COATS OF SATIN LACQUER TO FIN. WD29

MILLWORK CONTRACTOR TO ENSURE THAT ALL SHELVES ARE IN EXACT ALIGNMENT WITH ADJACENT B252, B253 & B257 UNITS.

HARDWARE SPECIFICATIONS:

ADAM RITE DEADLOCK #ARMS1850S410628
MORTISE CYLINDER #LSM1002SCC26D
1" C/W (2) KEYS CLEAR ANODIZED ALUMINUM FINISH
STRIKE FOR HOOK BOLT #ARMS4001031628
SPACER RING #IL861F2810 – 1/4" THK.
CLEAR ANODIZED ALUMINUM
NOTE: LOCK CYLINDER TO BE SUPPLIED & INSTALLED BY LCBO, FITUP BY G.C.

3" .060 GA 8FT LONG CONTINUOUS
PIANO HINGE BY RICHELIEU
MODEL: #76096180 (BRUSHED NICKEL FINISH)

DOOR PULL BY RICHELIEU
MODEL: #458160195 (BRUSHED NICKEL FINISH)

HEAVY DUTY RECESSED SLOTTED
STANDARDS W/ 5/8" SLOTS @ 1" O.C.
(KEMBER #5000 SERIES) AND KEMBER #5037
STUB BRACKETS BOTH TO MATCH FIN. MT55

NOTE:
SOLID WOOD GRADE TO BE FAS

NOTE:
MILLWORK CONTRACTOR TO ENSURE THAT FIXTURE IS CONSTRUCTED SO THAT LIGHT FIXTURES CAN BE SERVICED AND/OR REMOVED WITHOUT DISMANTLING MILLWORK

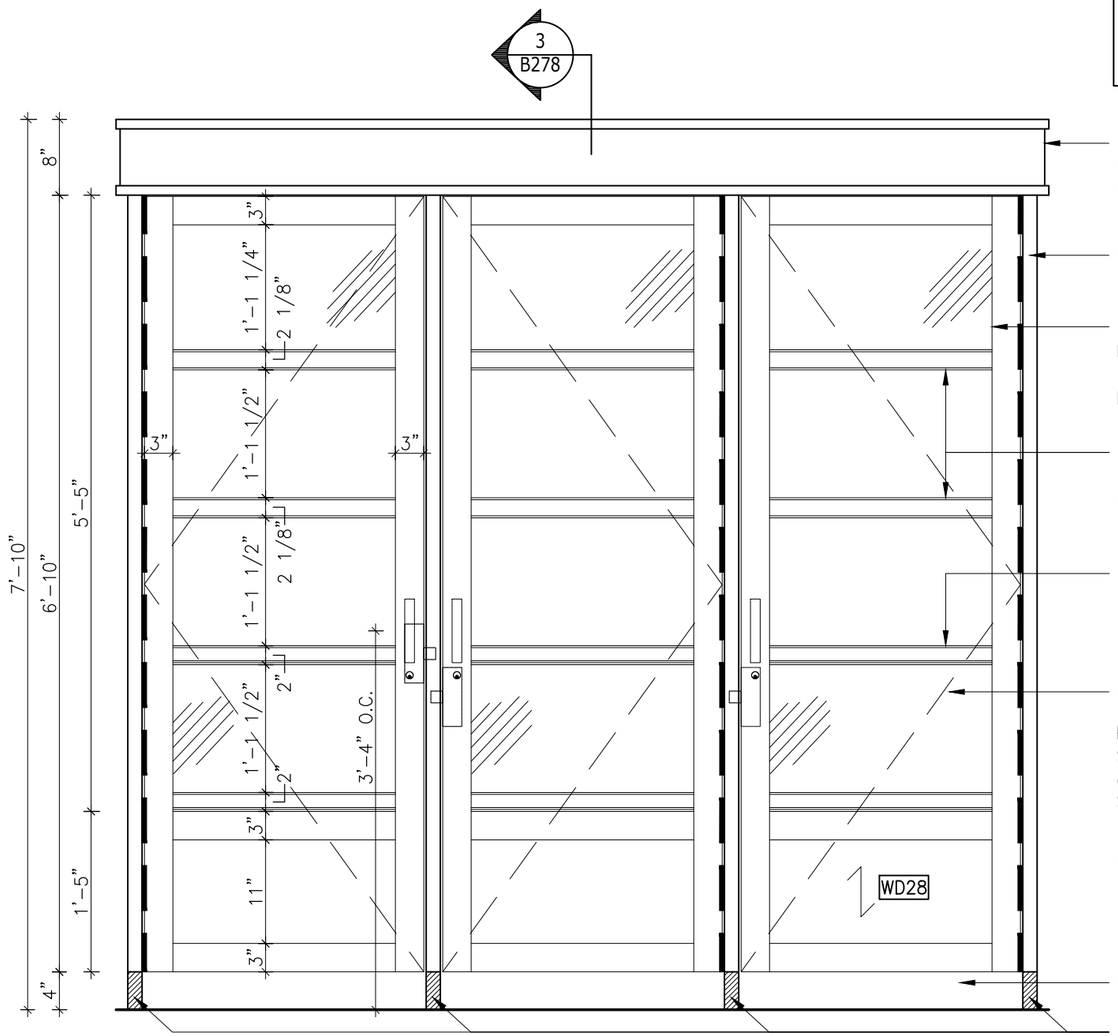

2 B278 ELEVATION
3/4" = 1'-0"

NOTE:
ALL WOOD TICKET MOULDINGS TO ACCOMMODATE 1¾" PAPER TICKET

NOTE:
EACH DOOR TO HAVE INDIVIDUAL LOCKING MECHANISM

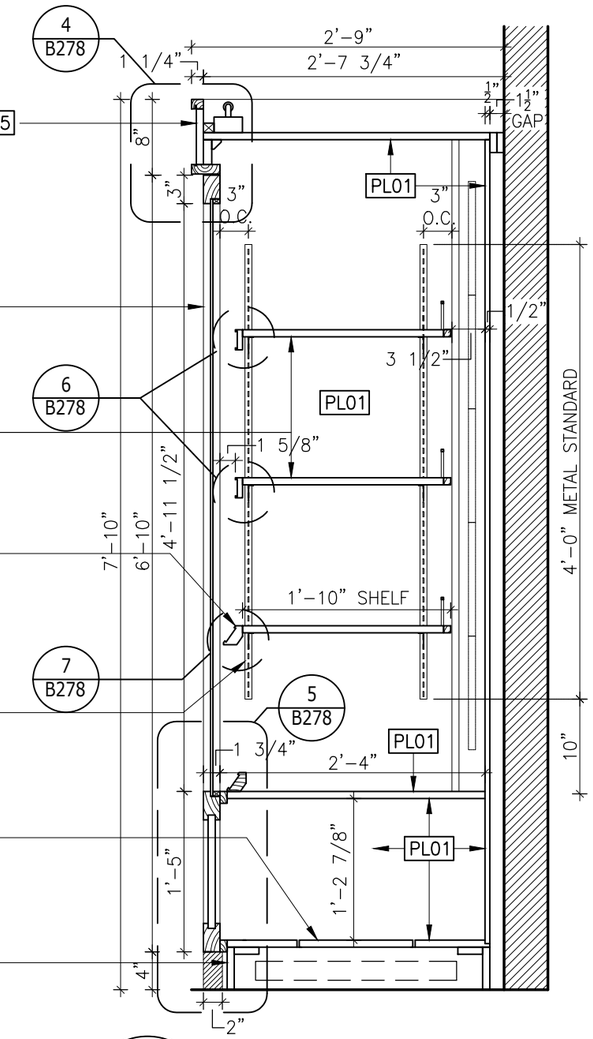

3 B278 SECTION
3/4" = 1'-0"

LCBO	B200 GENERAL LIST	REVISION DATE	REV.	2 of 4	ISSUE DATE	STORE TYPE	STORE #
	3-MODULE GENERAL LIST PERIMETER LOCKABLE DISPLAY (7'-10" H.)	2019 NOV	01	B278	2019 NOV		312

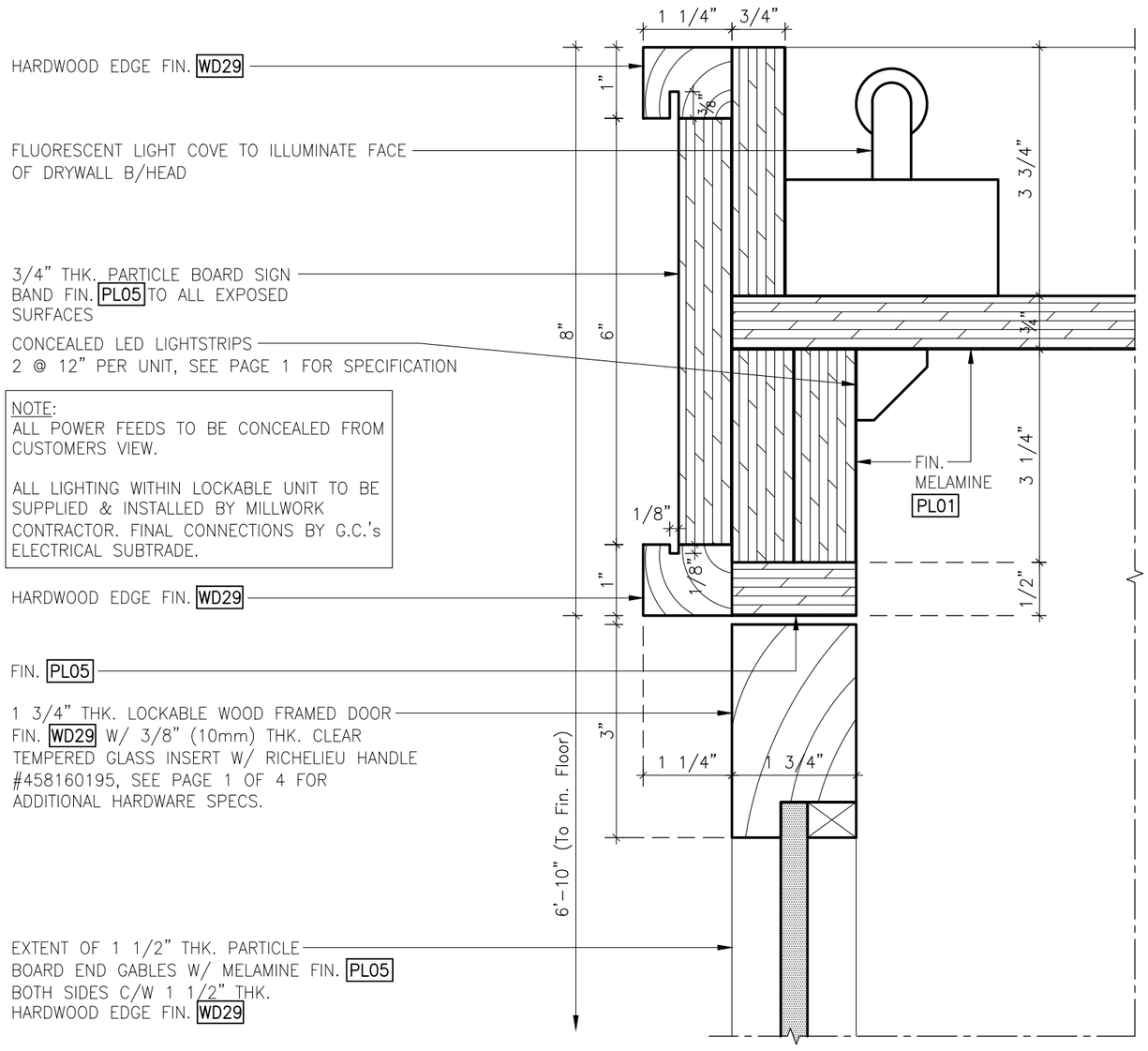

4 / B278 SECTION–DETAIL
6" = 1'-0"

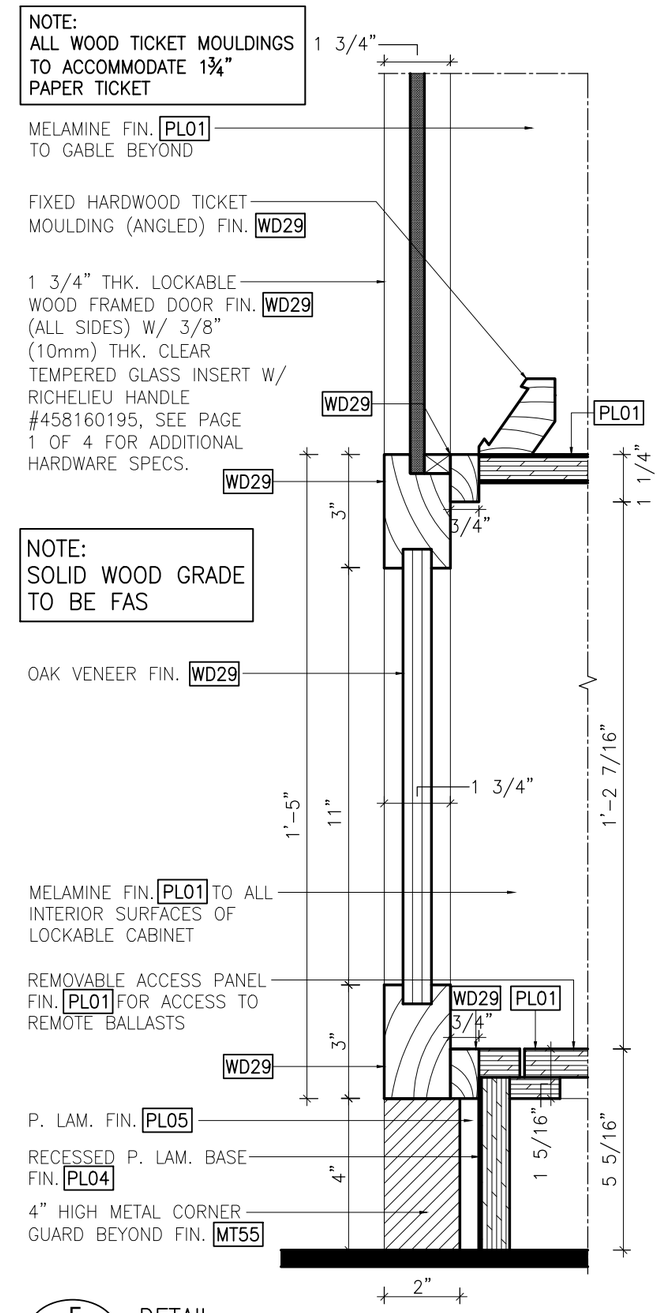

5 / B278 DETAIL
3" = 1'-0"

LCBO	B200 GENERAL LIST	REVISION DATE	REV.	3 of 4	ISSUE DATE	STORE TYPE	STORE #
	3-MODULE GENERAL LIST PERIMETER LOCKABLE DISPLAY (7'-10" H.)	2019 NOV	01	B278	2019 NOV		312

NOTE:
ALL WOOD TICKET MOULDINGS TO ACCOMMODATE 1¾" PAPER TICKET

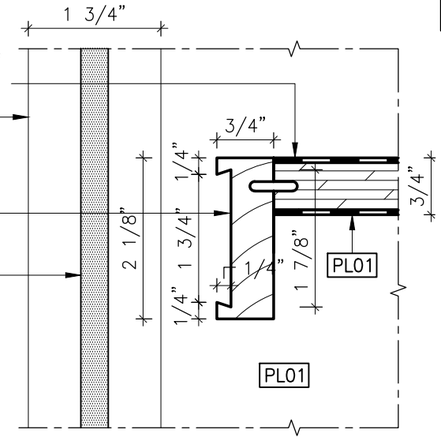

6 B278 DETAIL
6" = 1'-0"

NOTE:
ALL WOOD TICKET MOULDINGS TO ACCOMMODATE 1¾" PAPER TICKET

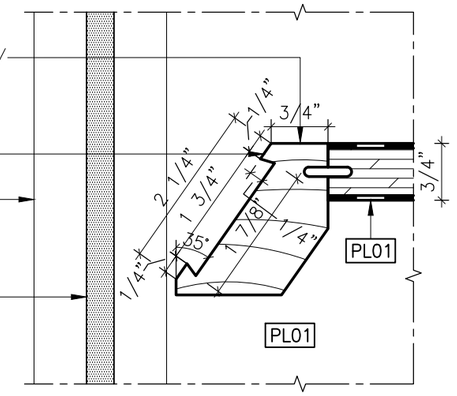

7 B278 DETAIL
6" = 1'-0"

L.E.D. LIGHTSTRIPS:
PROVIDE 36 @ 12" LENGTH AS INDICATED WITHIN MILLWORK.

LED LIGHTSTRIPS BY TECHNILITE:
MODEL#: L3-32-GI-SEB
LENGTH=12"
OUTPUT=2.4 WATTS / 97 LUMENS PER FT.
COLOUR TEMP. 3200°K
DURATION: 50,000 HRS

*ALL L.E.D. LIGHTING AND ASSOCIATED COMPONENTS TO BE SUPPLIED & INSTALLED BY MILLWORK CONTRACTOR, FINAL CONNECTION BY G.C.'S ELECTRICAL SUBTRADE. ENSURE ALL WIRING/DRIVERS ARE CONCEALED FROM CUSTOMER'S VIEW.

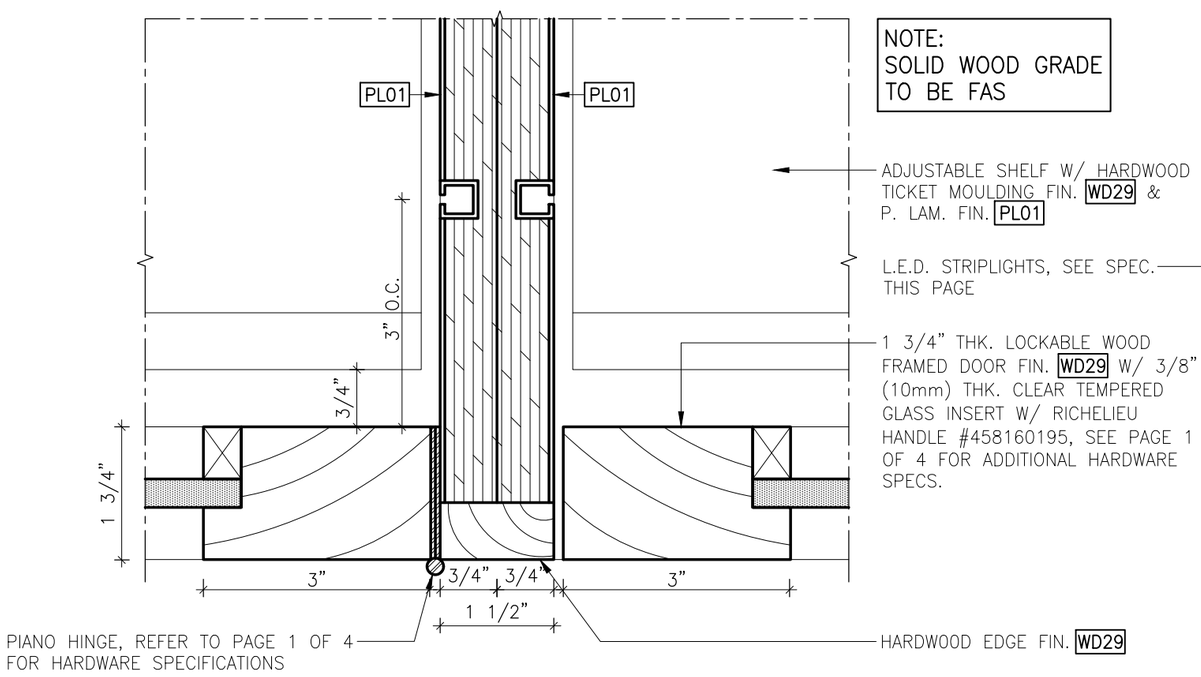

NOTE:
SOLID WOOD GRADE TO BE FAS

ADJUSTABLE SHELF W/ HARDWOOD TICKET MOULDING FIN. WD29 & P. LAM. FIN. PL01

L.E.D. STRIPLIGHTS, SEE SPEC. THIS PAGE

1 3/4" THK. LOCKABLE WOOD FRAMED DOOR FIN. WD29 W/ 3/8" (10mm) THK. CLEAR TEMPERED GLASS INSERT W/ RICHELIEU HANDLE #458160195, SEE PAGE 1 OF 4 FOR ADDITIONAL HARDWARE SPECS.

8 B278 DETAIL
6" = 1'-0"

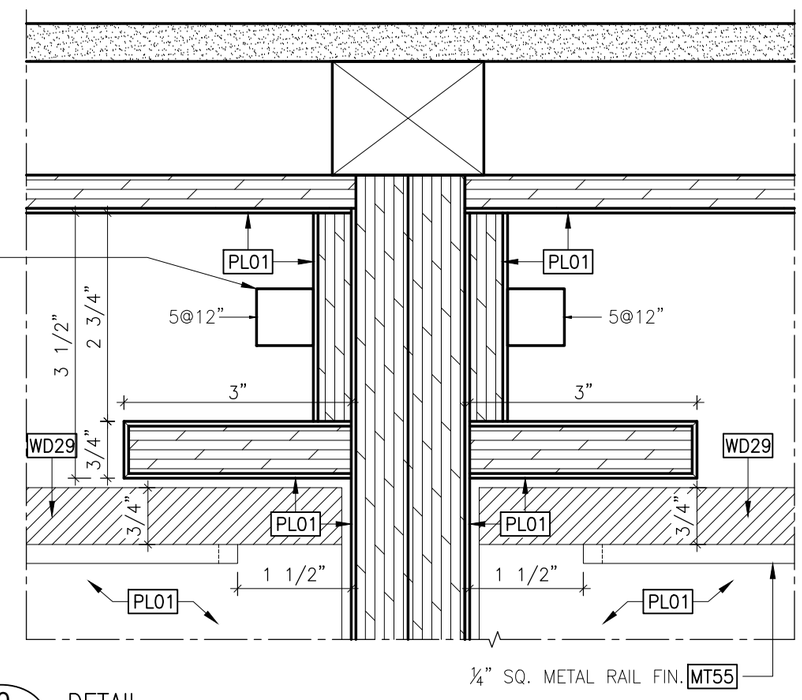

9 B278 DETAIL
6" = 1'-0"

LCBO	B200 GENERAL LIST	REVISION DATE	REV.	4 of 4	ISSUE DATE	STORE TYPE	STORE #
	3-MODULE GENERAL LIST PERIMETER LOCKABLE DISPLAY (7'-10" H.)	2019 NOV	01	B278	2019 NOV		312

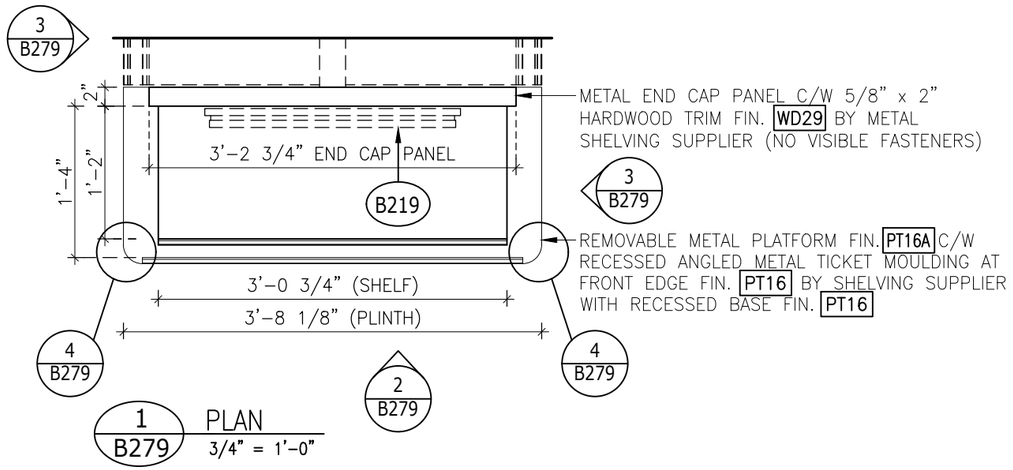

1 B279 PLAN
3/4" = 1'-0"

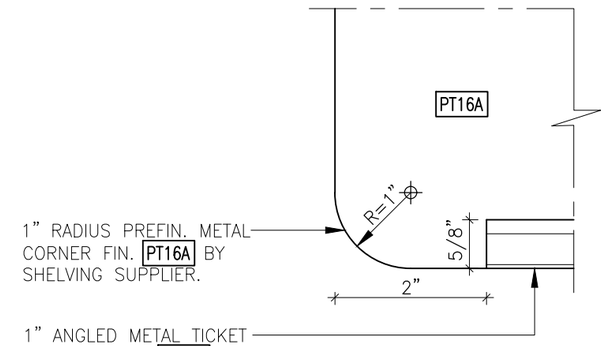

5 B279 PLAN-DETAIL
6" = 1'-0"

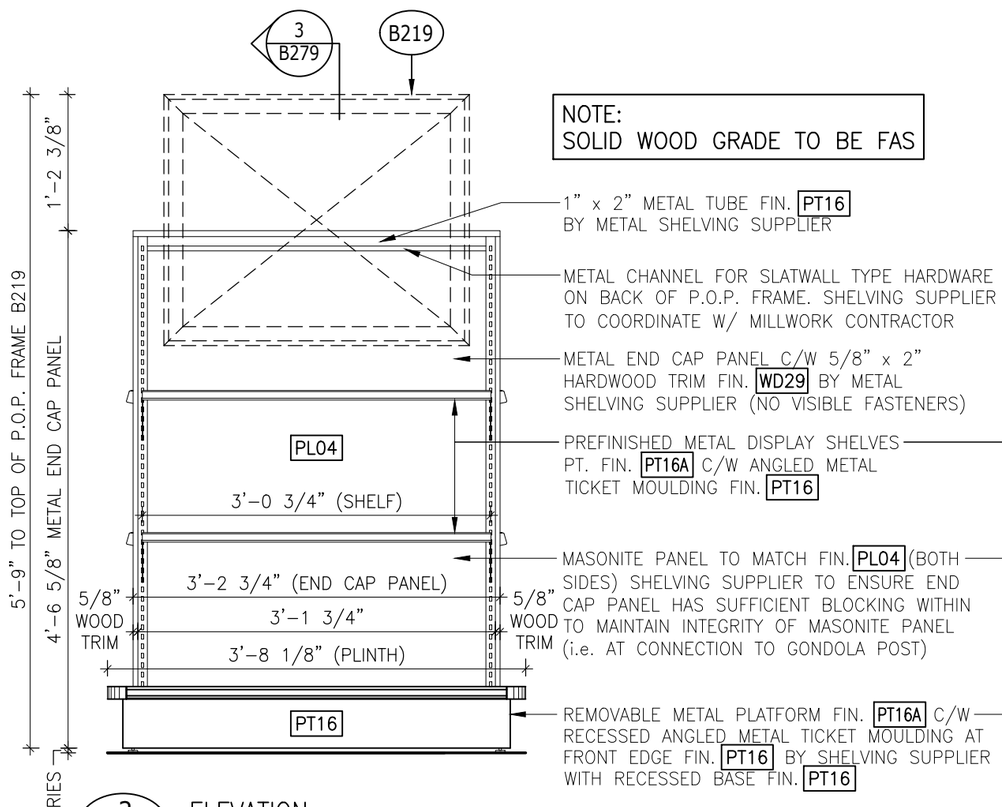

2 B279 ELEVATION
3/4" = 1'-0"

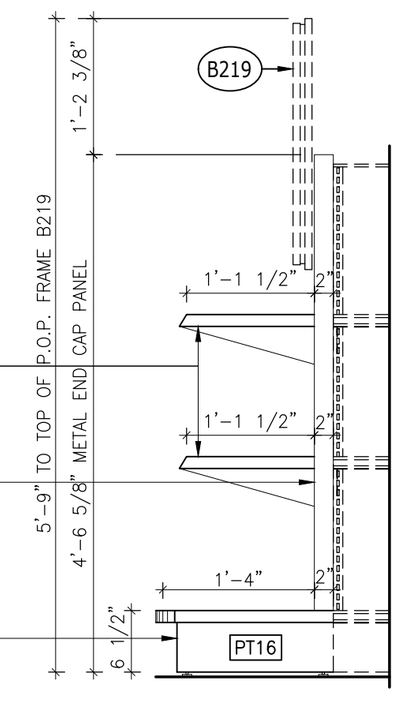

3 B279 ELEVATION
3/4" = 1'-0"

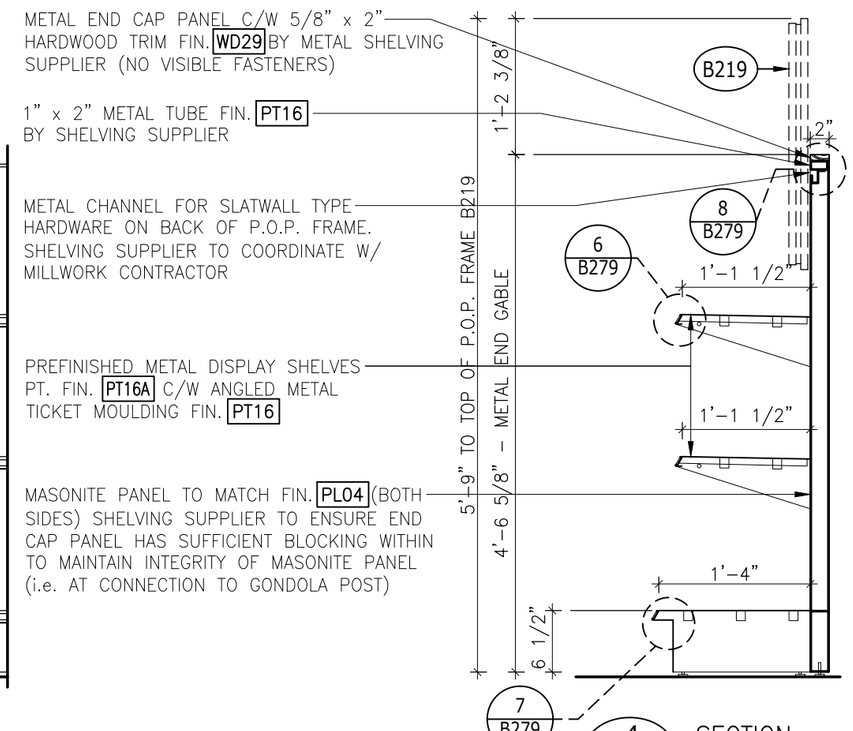

4 B279 SECTION
3/4" = 1'-0"

LCBO	B200 GENERAL LIST	REVISION DATE	REV.	1 of 2	ISSUE DATE	STORE TYPE	STORE #
	METAL GONDOLA END (NARROW) - GENERAL LIST	2019 NOV	01	B279	2019 NOV		312

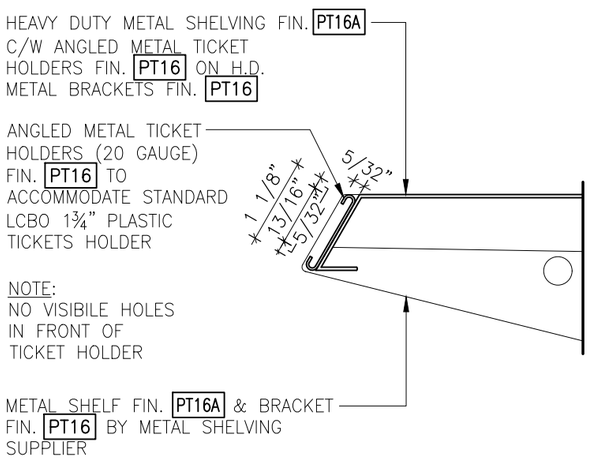

6 / B279 DETAIL
6" = 1'-0"

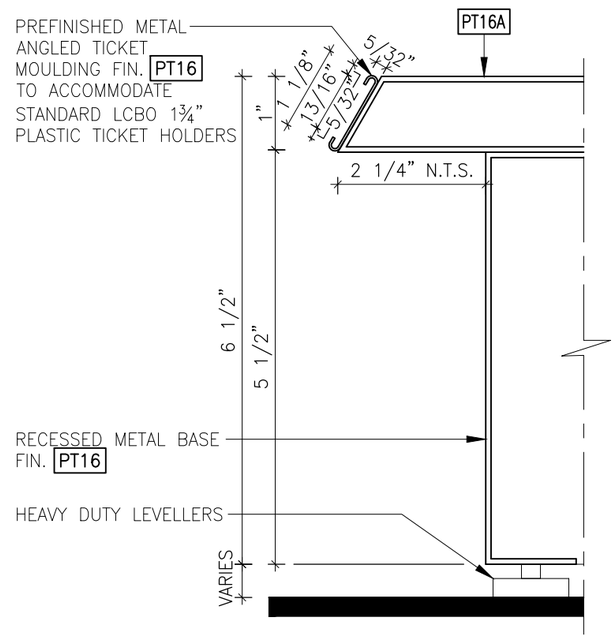

7 / B279 DETAIL
6" = 1'-0"

NOTE:
SOLID WOOD GRADE TO BE FAS

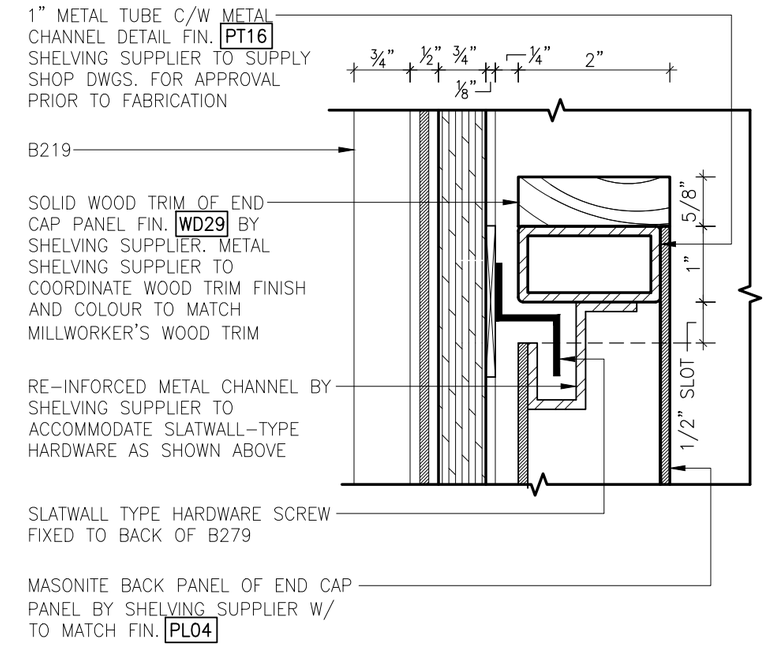

8 / B279 DETAIL
6" = 1'-0"

LCBO	B200 GENERAL LIST	REVISION DATE	REV.	2 of 2	ISSUE DATE	STORE TYPE	STORE #
	METAL GONDOLA END (NARROW) - GENERAL LIST	2019 NOV	01	B279	2019 NOV		312

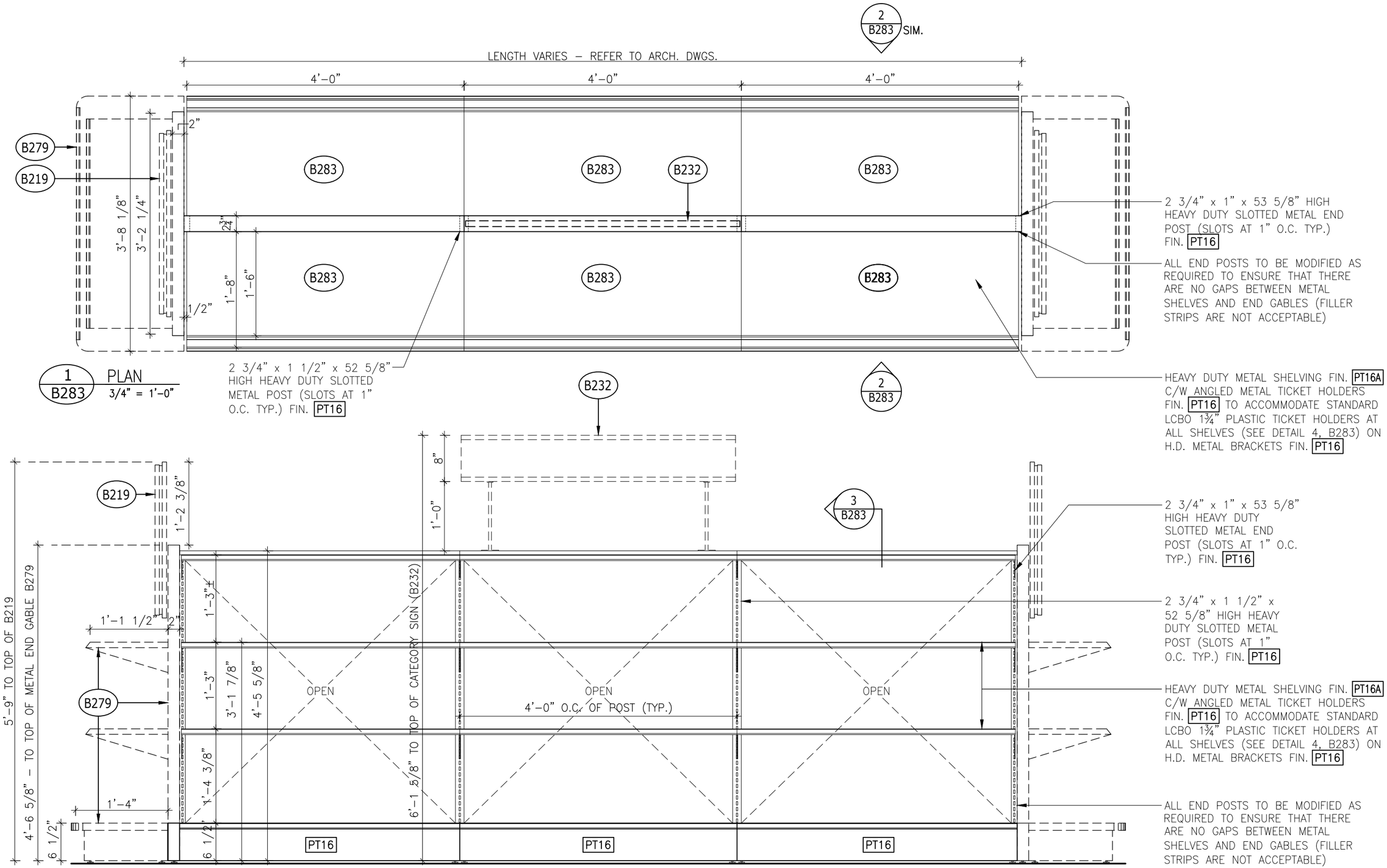

2 B283 ELEVATION 3/4" = 1'–0"

LCBO	B200 GENERAL LIST	REVISION DATE	REV.	1 of 2	ISSUE DATE	STORE TYPE	STORE #
	4-HIGH 4'-0" METAL FLOOR GONDOLA (NARROW) - GENERAL LIST	2019 NOV	01	B283	2019 NOV		312

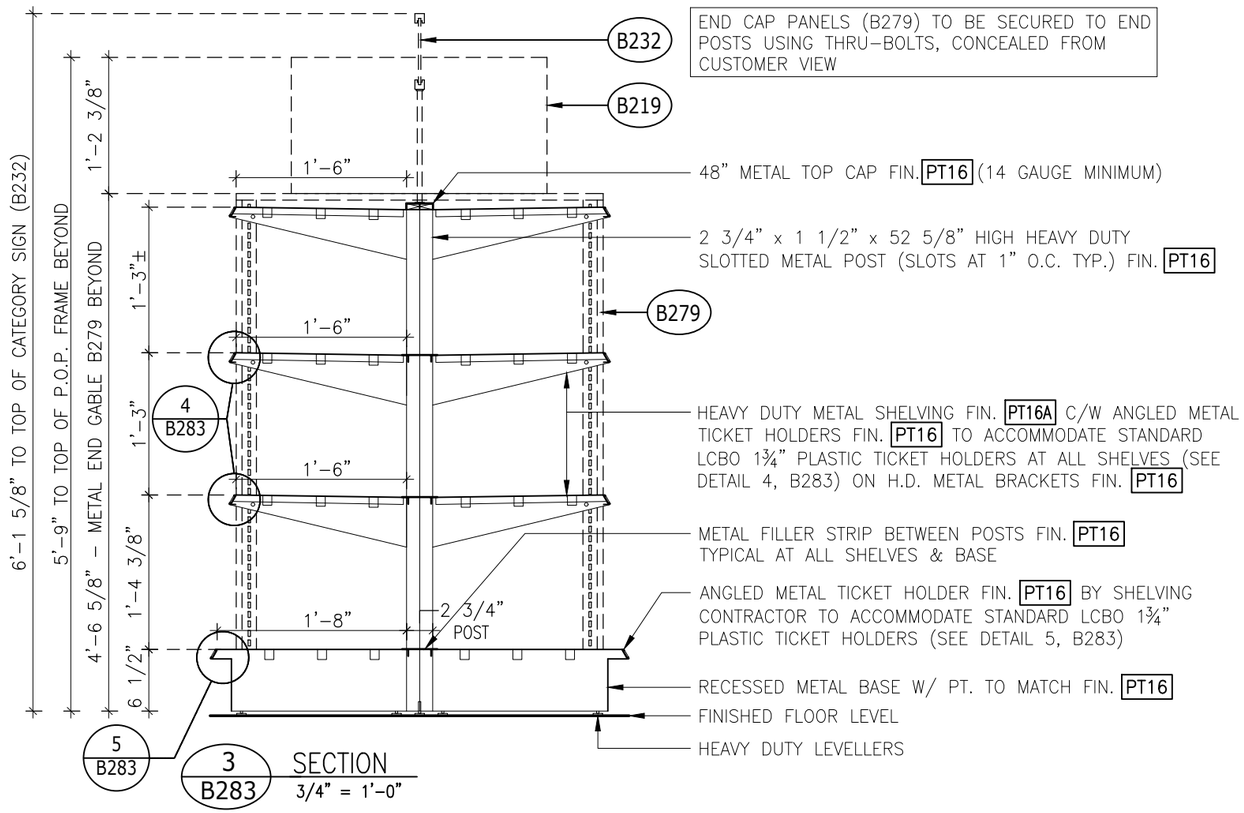

3 B283 SECTION
3/4" = 1'-0"

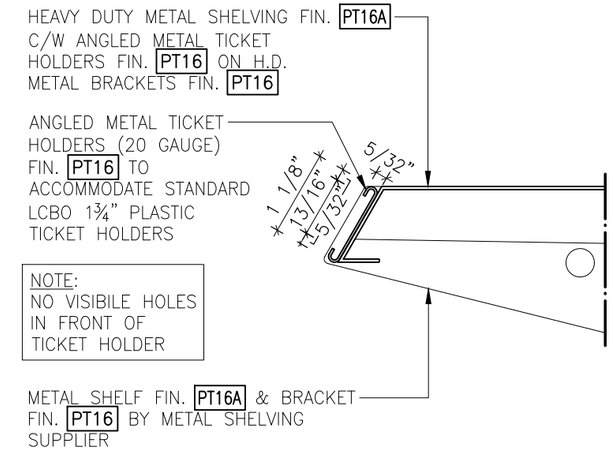

4 B283 DETAIL
6" = 1'-0"

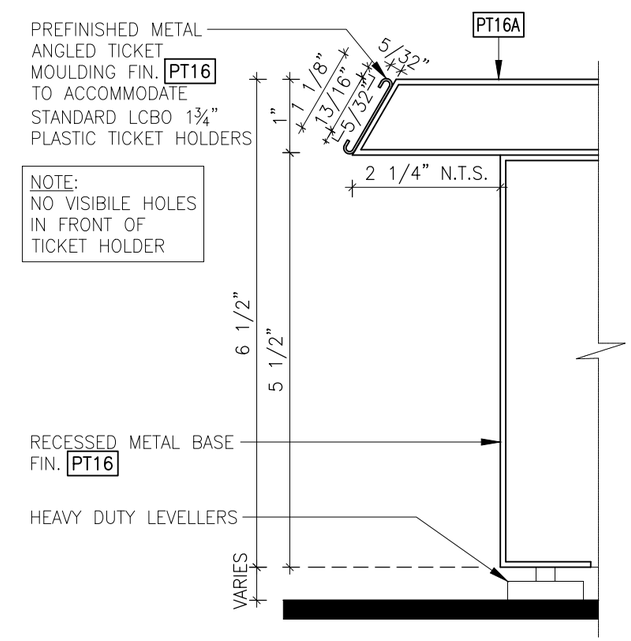

5 B283 DETAIL
6" = 1'-0"

LCBO	B200 GENERAL LIST	REVISION DATE	REV.	2 of 2	ISSUE DATE	STORE TYPE	STORE #
	4-HIGH 4'-0" METAL FLOOR GONDOLA (NARROW) - GENERAL LIST	2019 NOV	01	B283	2019 NOV		312

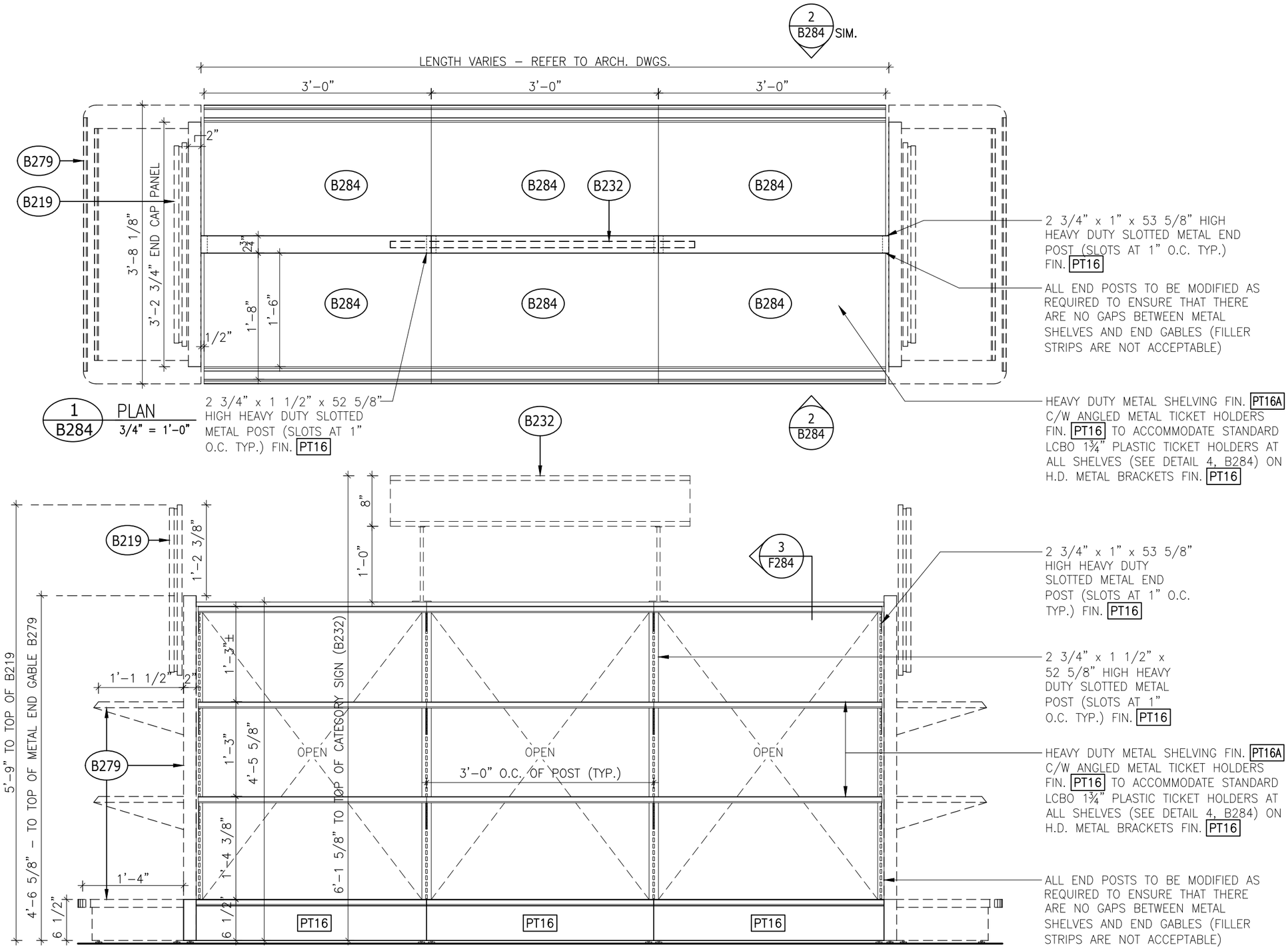

2 B284 ELEVATION 3/4" = 1'-0"

LCBO	B200 GENERAL LIST	REVISION DATE	REV.	1 of 2	ISSUE DATE	STORE TYPE	STORE #
	4-HIGH 3'-0" METAL FLOOR GONDOLA (NARROW) - GENERAL LIST	2019 NOV	01	B284	2019 NOV		312

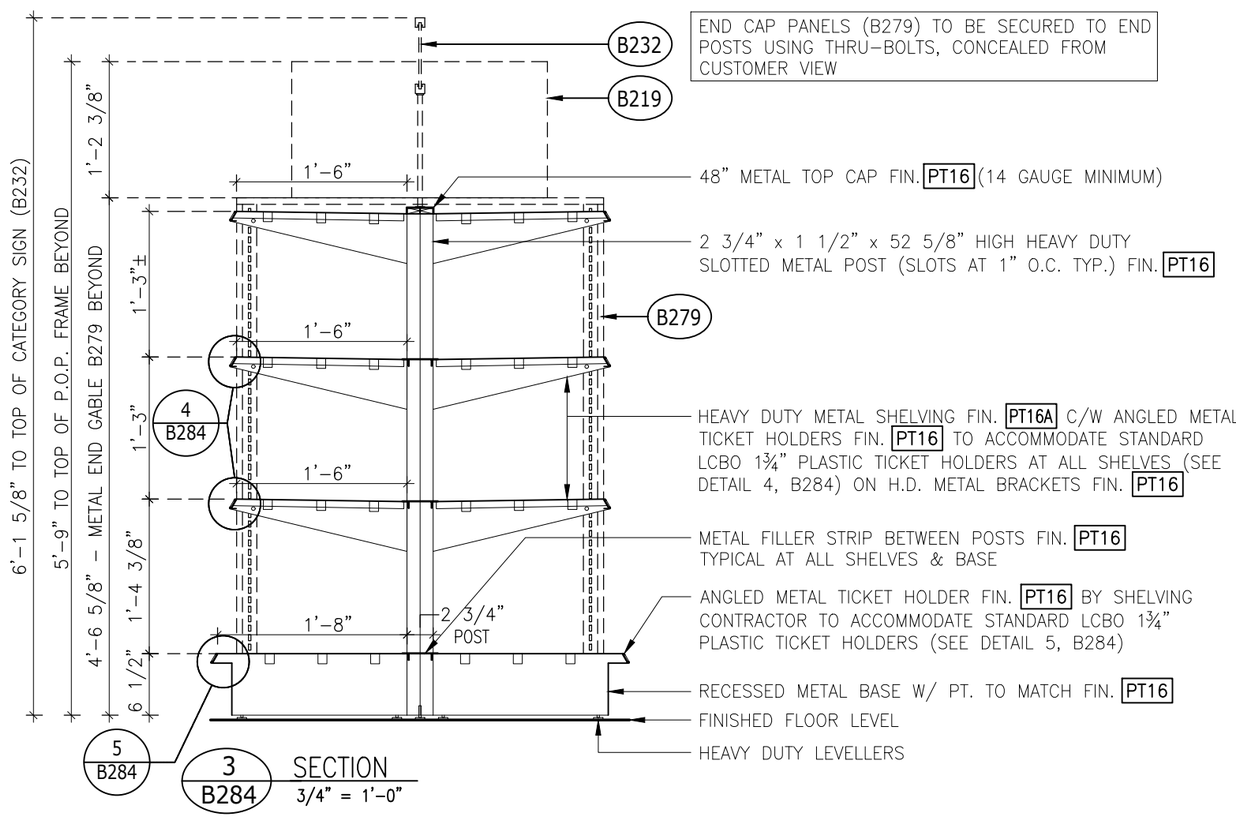

3 B284 SECTION
3/4" = 1'-0"

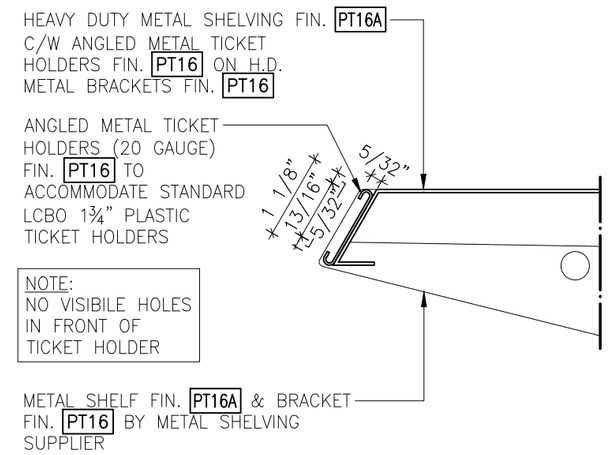

4 B284 DETAIL
6" = 1'-0"

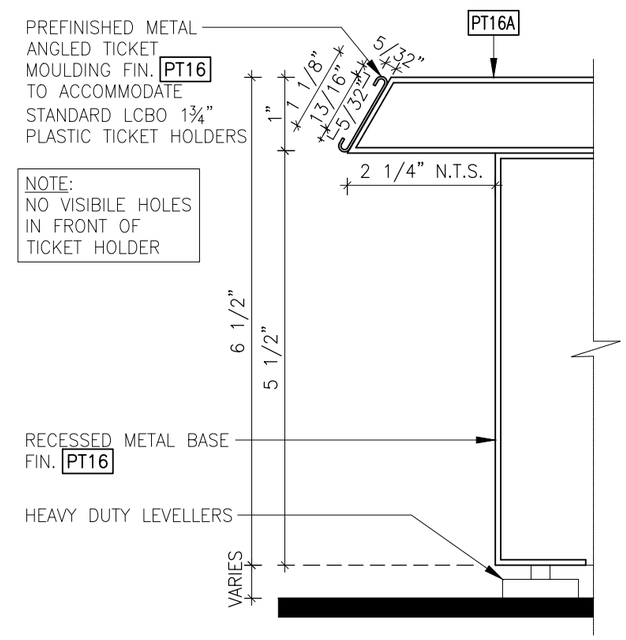

5 B284 DETAIL
6" = 1'-0"

LCBO	B200 GENERAL LIST	REVISION DATE	REV.	2 of 2	ISSUE DATE	STORE TYPE	STORE #
	4-HIGH 3'-0" METAL FLOOR GONDOLA (NARROW) - GENERAL LIST	2019 NOV	01	B284	2019 NOV		312

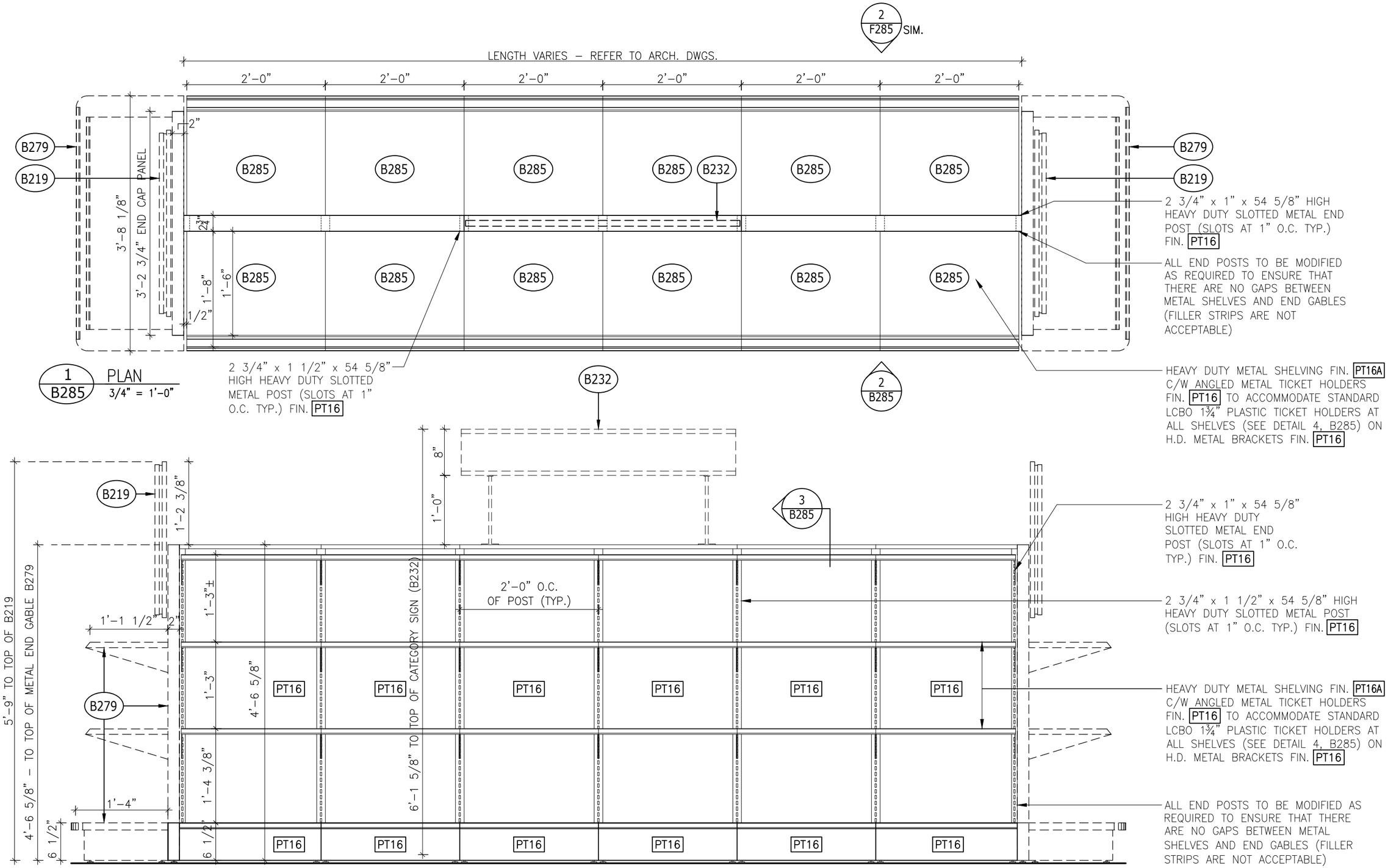

LCBO	B200 GENERAL LIST	REVISION DATE	REV.	1 of 2	ISSUE DATE	STORE TYPE	STORE #
	4-HIGH 2'-0" CONVERTIBLE FLOOR GONDOLA (NARROW) - GENERAL LIST	2019 NOV	01	B285	2019 NOV		312

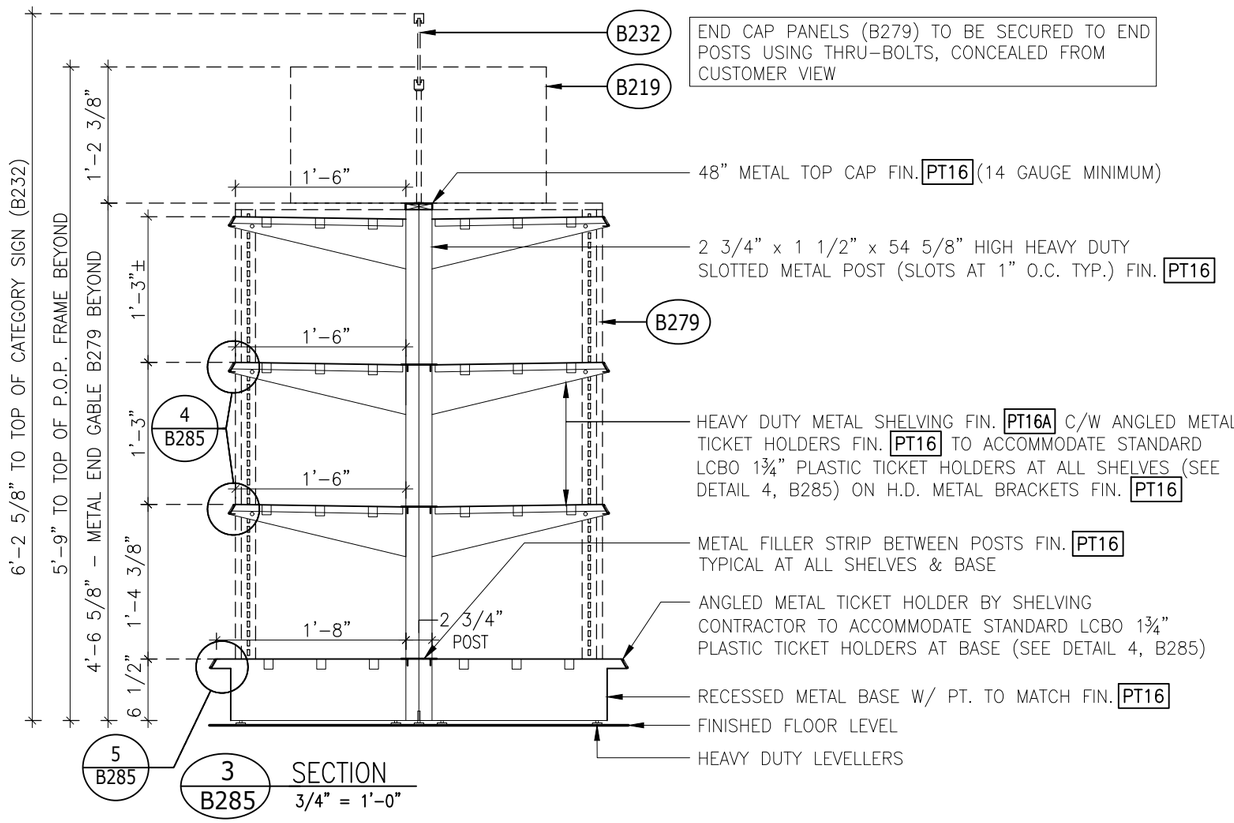

3 B285 SECTION
3/4" = 1'-0"

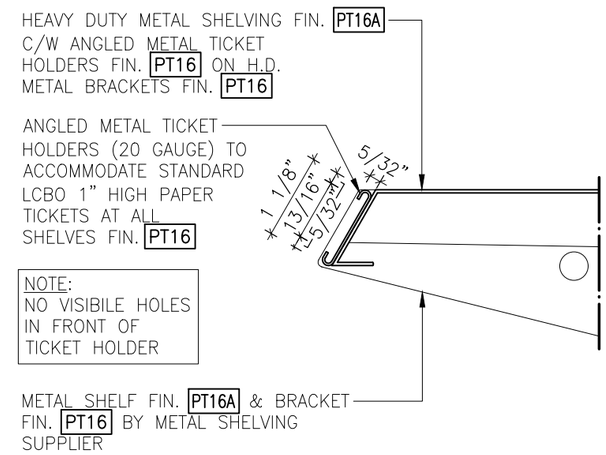

4 B285 DETAIL
6" = 1'-0"

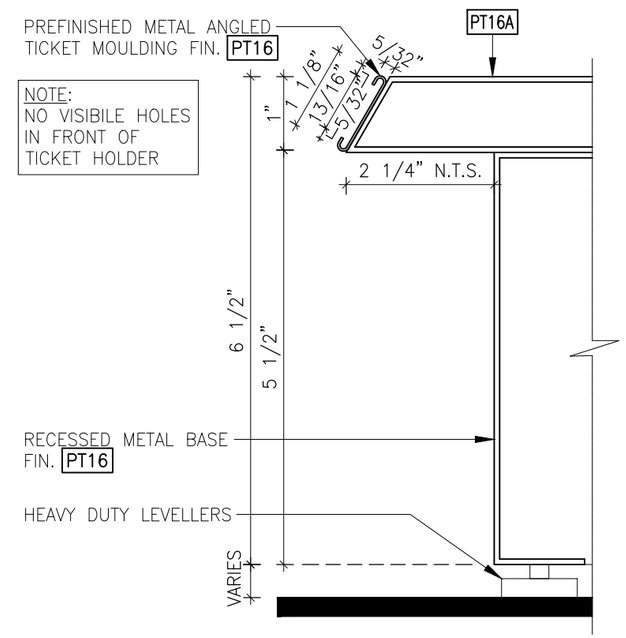

5 B285 DETAIL
6" = 1'-0"

LCBO	B200 GENERAL LIST	REVISION DATE	REV.	2 of 2	ISSUE DATE	STORE TYPE	STORE #
	4-HIGH 2'-0" CONVERTIBLE FLOOR GONDOLA (NARROW) - GENERAL LIST	2019 NOV	01	B285	2019 NOV		312

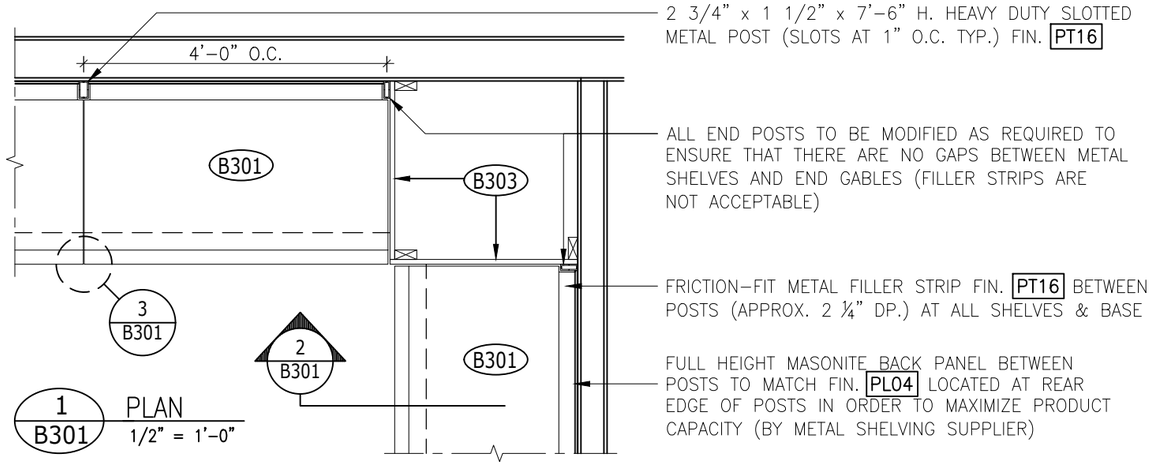

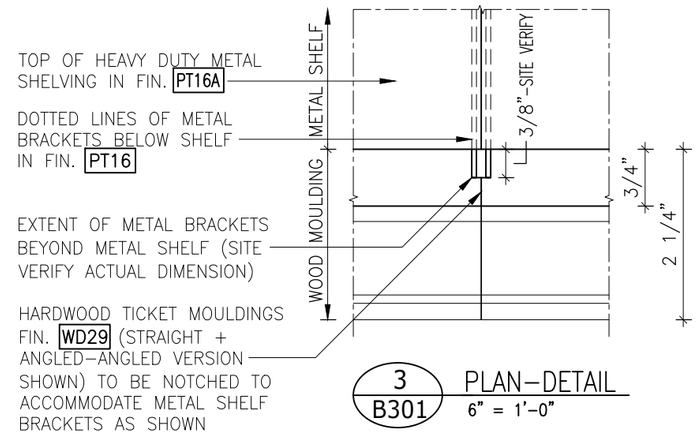

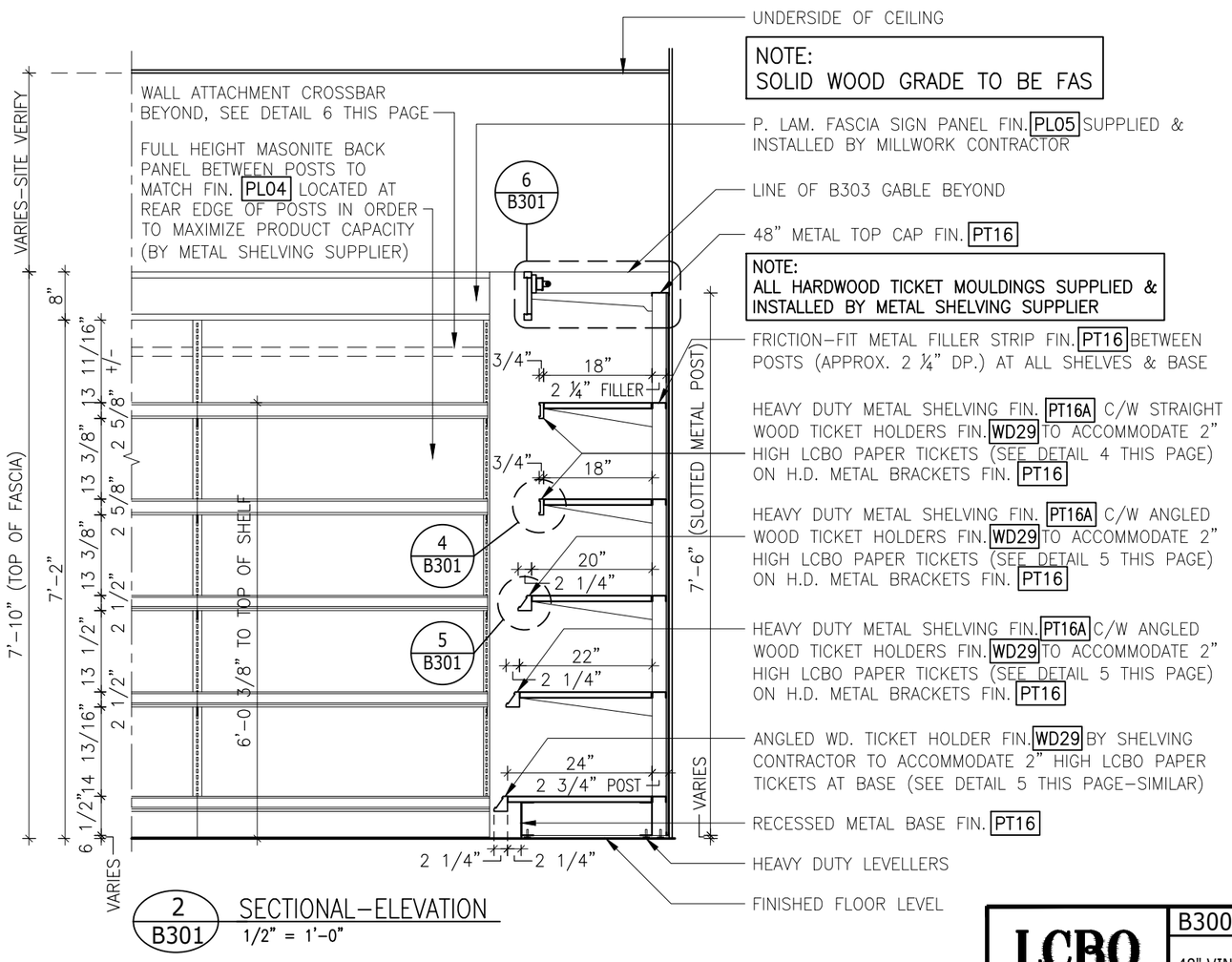

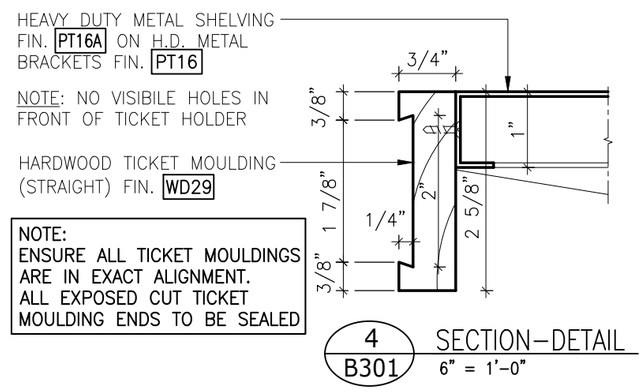

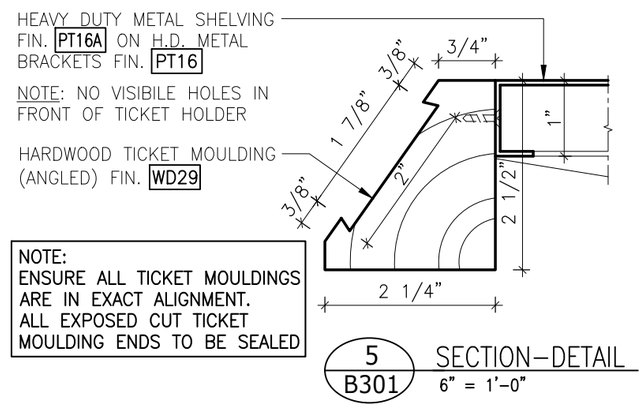

LCBO	B300 VINTAGES	REVISION DATE	REV.	1 of 2	ISSUE DATE	STORE TYPE	STORE #
	48" VINTAGES PERIMETER METAL SHELVING UNIT C/W FASCIA PANEL	2019 NOV	01	B301	2019 NOV		312

NOTE:
MILLWORK CONTRACTOR TO ENSURE THAT WOOD SIGN BAND IS TRUE AND LEVEL.

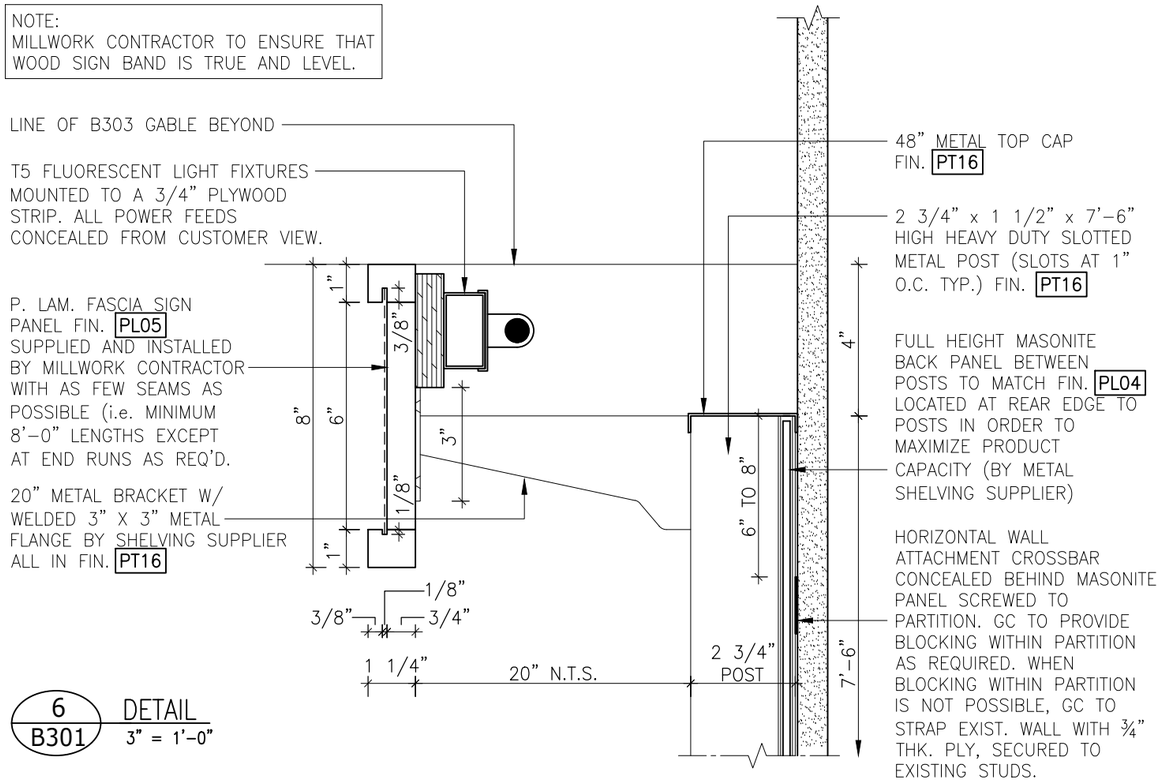

6 / B301 DETAIL
3" = 1'-0"

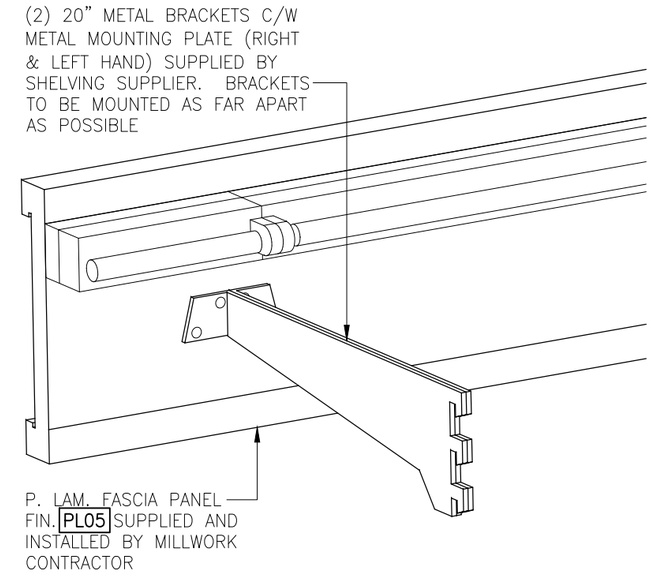

7 / B301 SIGN BAND MOUNTING ISOMETRIC
N.T.S.

GENERAL NOTES

- DIMENSIONS SHOWN REFLECT SHELF & BASE DIMENSIONS ONLY & DO NOT TAKE TICKET HOLDERS INTO ACCOUNT, UNLESS SPECIFICALLY NOTED
- ALL ADJUSTMENTS TO COMPENSATE FOR NON-LEVEL FLOOR SURFACES TO BE MADE AT BOTTOM END OF POST
- GC TO CO-ORDINATE MILLWORK + METAL SHELF INSTALLATION
- T5 FLUORESCENT LIGHT FIXTURES TO BE SUPPLIED & INSTALLED BY G.C.
- GC RESPONSIBLE FOR INSTALLATION OF WALL STRAPPING AS REQ'D.
- MILLWORK CONTRACTOR TO OBTAIN SIGNAGE SAMPLE FROM LCBO PRIOR TO FABRICATION TO ENSURE PROPER FIT OF SIGNAGE INSERT
- SHELVING SUPPLIER TO OBTAIN 2" HIGH PAPER TICKET SAMPLE FROM LCBO PRIOR TO FABRICATION TO ENSURE PROPER FIT WITHIN TICKET MOULDING. SUBMIT SAMPLE FOR APPROVAL
- GC TO ENSURE ALL SHELVES ARE IN EXACT ALIGNMENT AND ARE TRUE & LEVEL. PERFORATED SHELVES ARE ACCEPTABLE. SHELVES TO SUPPORT LOAD CAPACITY OF 500LBS
- ALL END POSTS TO BE MODIFIED AS REQUIRED TO ENSURE THAT THERE ARE NO GAPS BETWEEN METAL SHELVES AND END GABLES (FILLER STRIPS ARE NOT ACCEPTABLE)

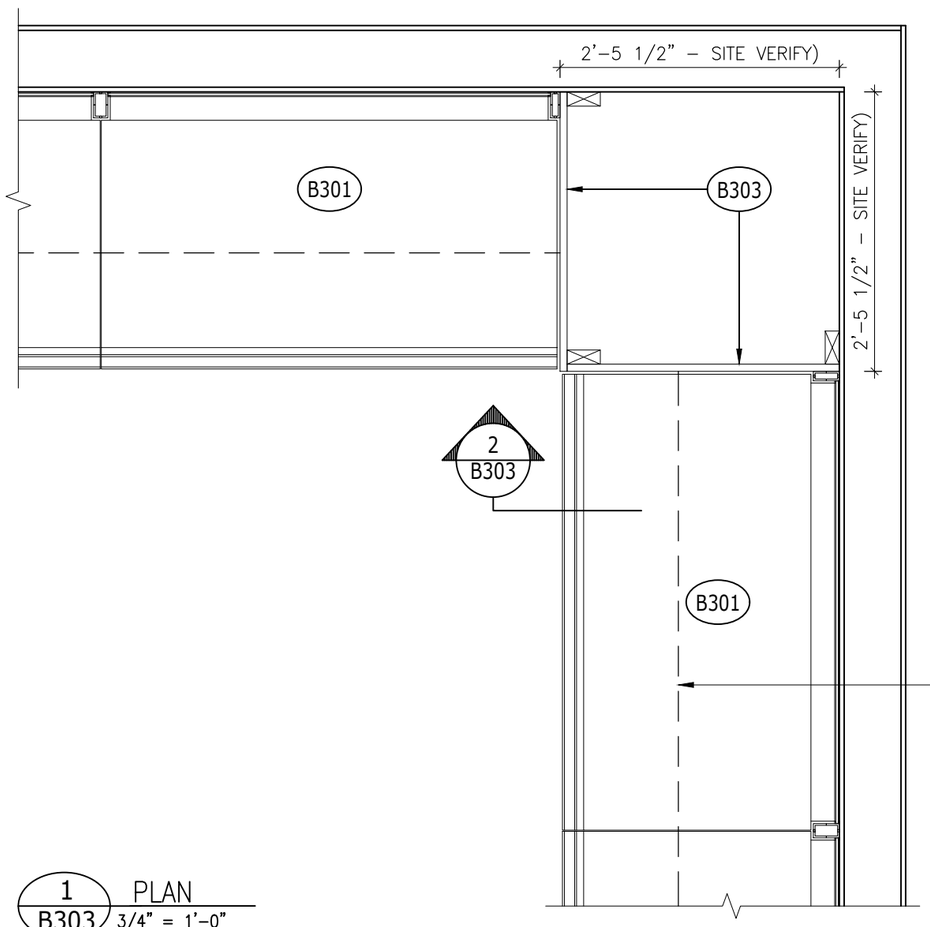

1 B303 PLAN
3/4" = 1'-0"

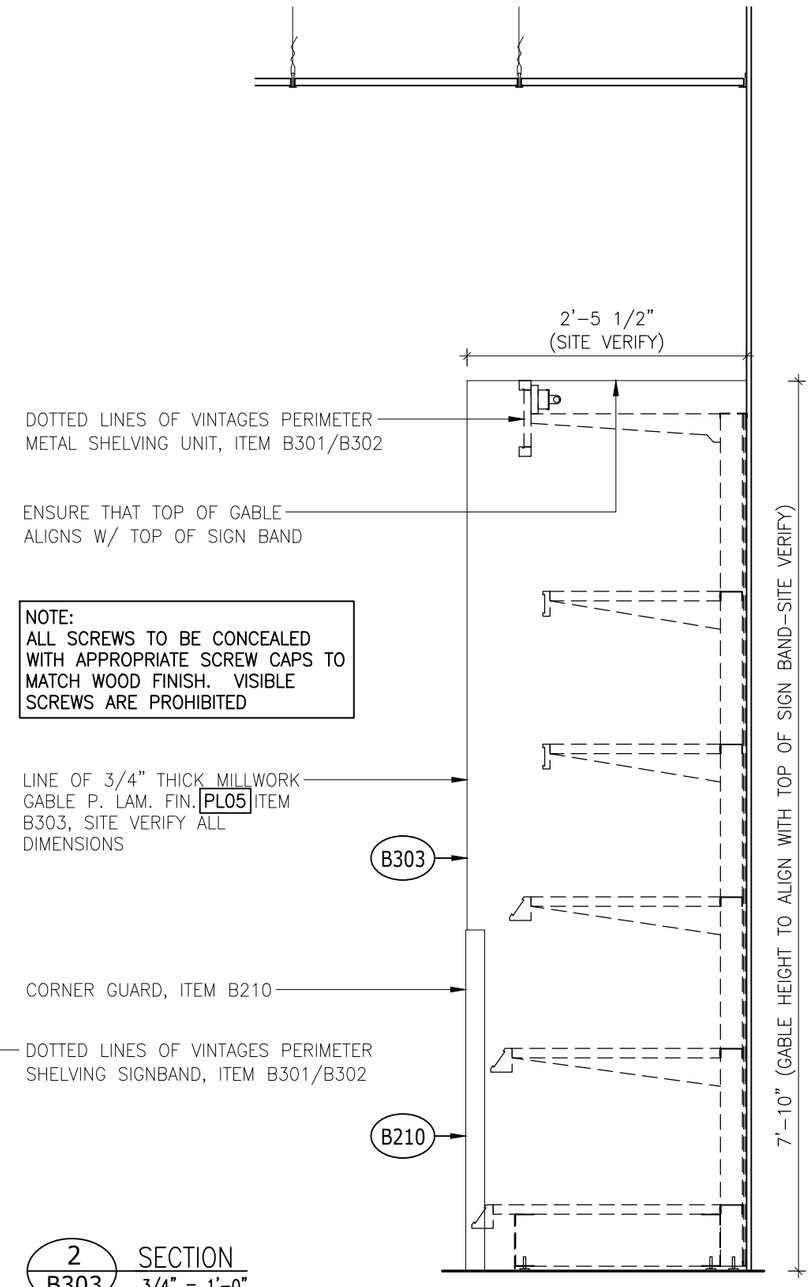

2 B303 SECTION
3/4" = 1'-0"

LCBO	B300 VINTAGES	REVISION DATE	REV.	1 of 1	ISSUE DATE	STORE TYPE	STORE #
	VINTAGES PERIMETER SHELVING GABLE/FILLER PANEL	2019 NOV	01	B303	2019 NOV		312

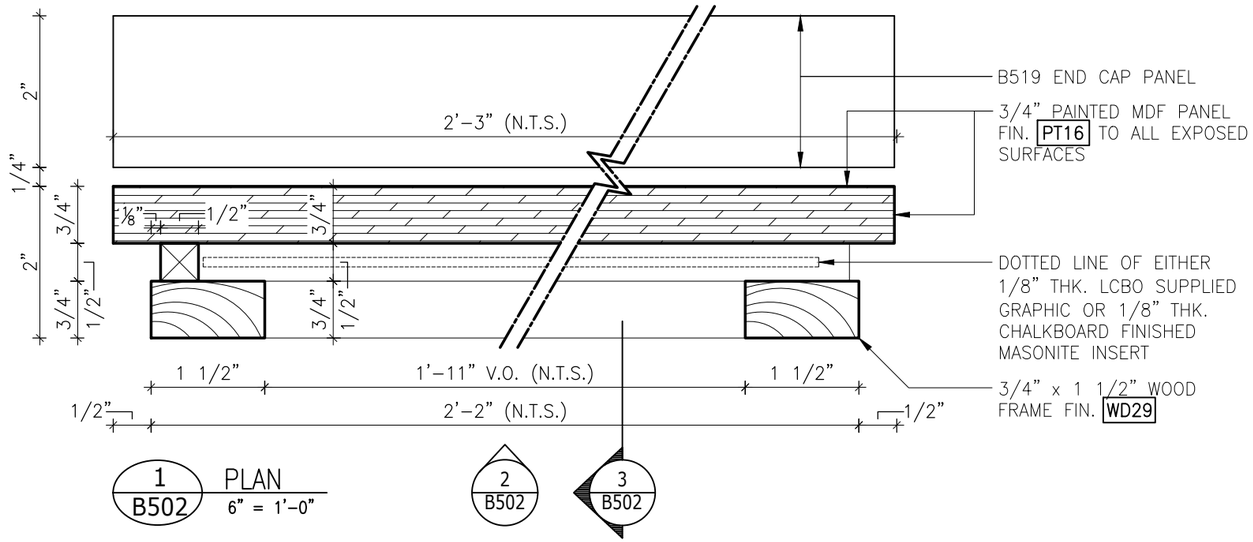

1 B502 PLAN
6" = 1'-0"

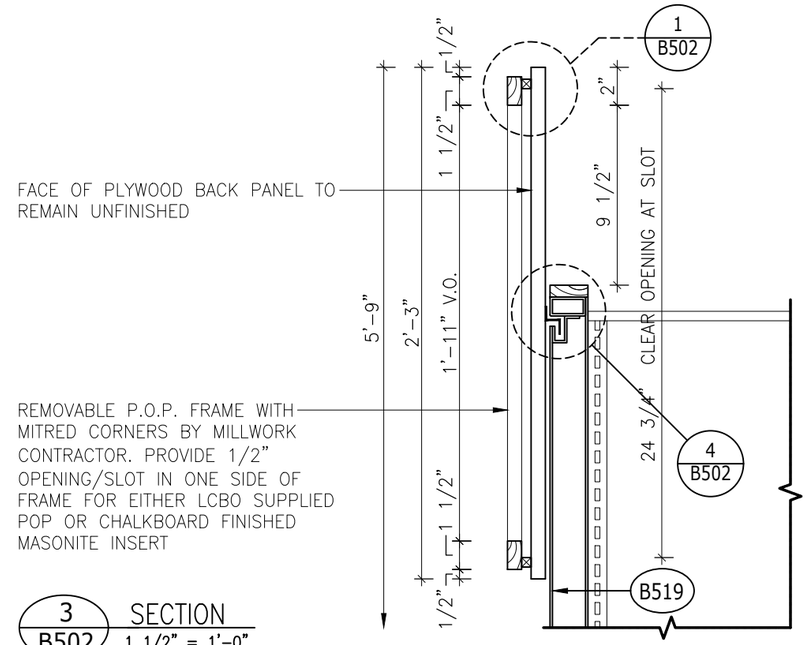

3 B502 SECTION
1 1/2" = 1'-0"

NOTE:
SOLID WOOD GRADE TO BE FAS

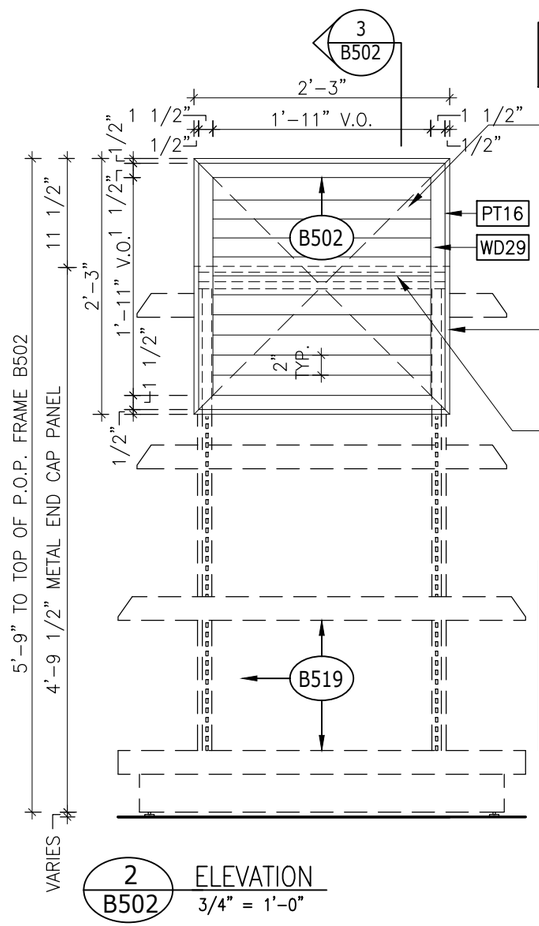

CHALKBOARD PAINT BY BENJAMIN MOORE STUDIO FINISHES 307 CHALKBOARD PAINT W/ FRESHSTART 563 PRIMER & CLEAR GLOSS LINES @ 2" O.C. TEL: (416) 813-3700 MILLWORK CONTRACTOR TO SUBMIT SAMPLE FOR APPROVAL

REMOVABLE P.O.P. FRAME WITH MITRED CORNERS BY MILLWORK CONTRACTOR. PROVIDE 1/2" OPENING/SLOT IN ONE SIDE OF FRAME FOR EITHER LCBO SUPPLIED POP OR CHALKBOARD FINISHED MASONITE INSERT

METAL CHANNEL IN B519 TO ACCOMMODATE SLATWALL-TYPE HARDWARE MOUNTED BEHIND B502 FRAME. SHELVING SUPPLIER TO COORDINATE W/ MILLWORK CONTRACTOR.

POSTER SIZE: 24 3/4" W. x 24 3/4" H.

MILLWORK CONTRACTOR TO PROVIDE FIVE (5) 24 3/4" x 24 3/4" REMOVABLE MASONITE PANELS W/ CHALKBOARD PAINT FINISH (MILLWORK CONTRACTOR TO CONFIRM EXACT QUANTITY REQUIRED PER STORE WITH LCBO DESIGN COORDINATOR)

2 B502 ELEVATION
3/4" = 1'-0"

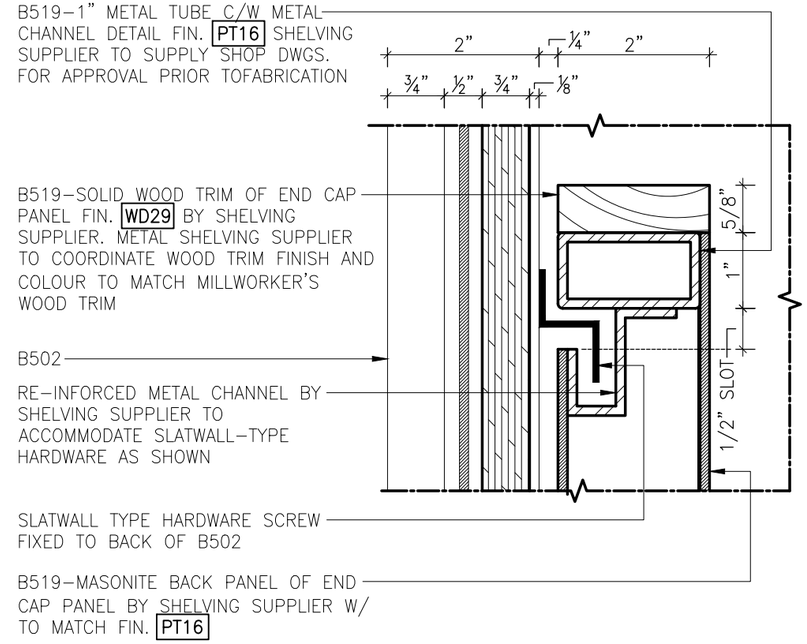

4 B502 DETAIL
6" = 1'-0"

LCBO	B500 VQA	REVISION DATE	REV.	1 of 1	ISSUE DATE	STORE TYPE	STORE #
	VQA REMOVABLE GONDOLA P.O.P FRAME	2019 NOV	01	B502	2019 NOV		312

NOTE:
SOLID WOOD GRADE TO BE FAS

DWG TO BE READ IN CONJUNCTION W/ DWG B520 & B521

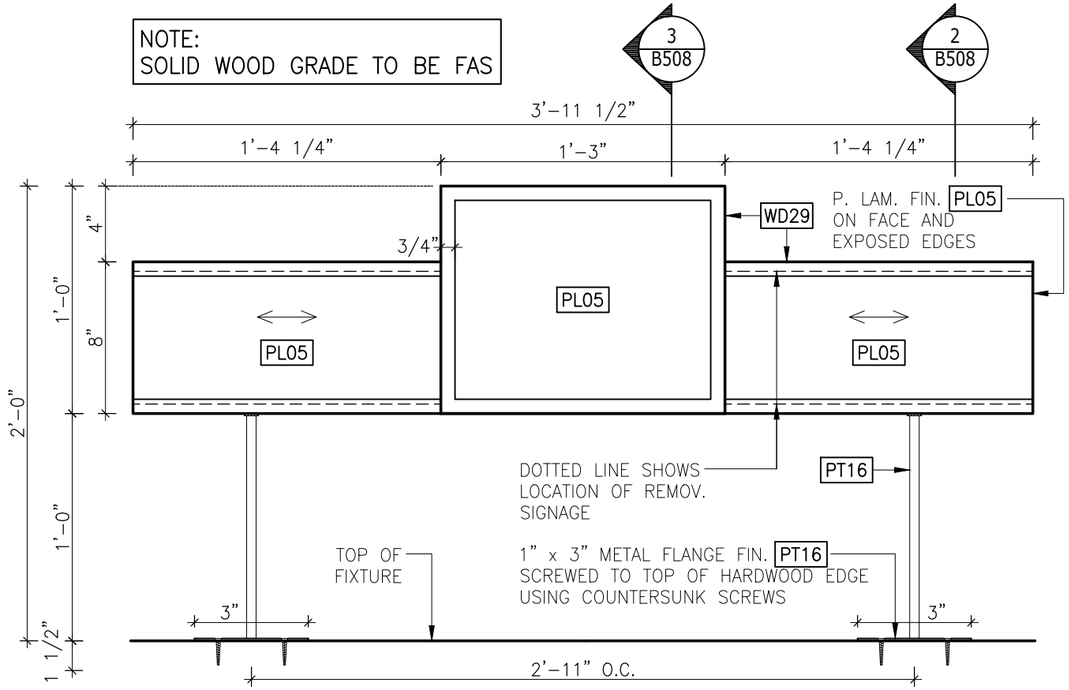

1 B508 ELEVATION (SIGNAGE TYPE 'B' – BOTH SIDES)
1 1/2" = 1'-0"

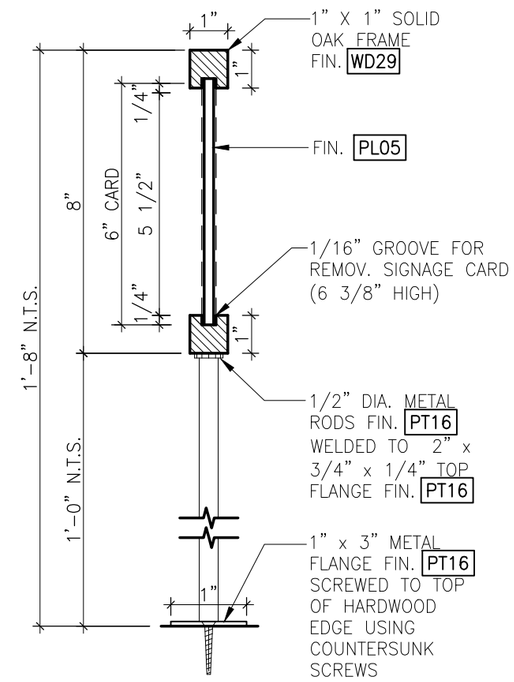

2 B508 SECTION
3" = 1'-0"

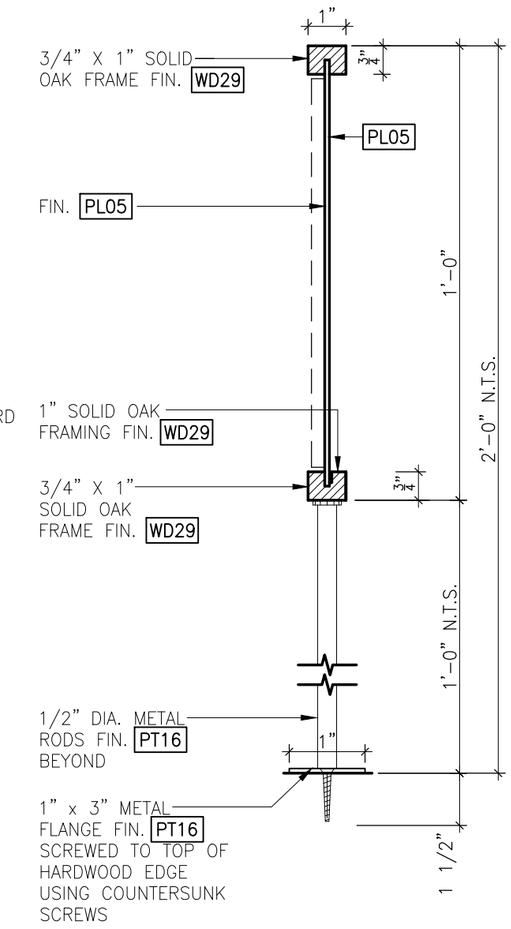

3 B508 SECTION
3" = 1'-0"

KEY PLANS
TYPICAL 'B' TYPE (B508) SIGNAGE CONDITIONS FOR VQA FIXTURES

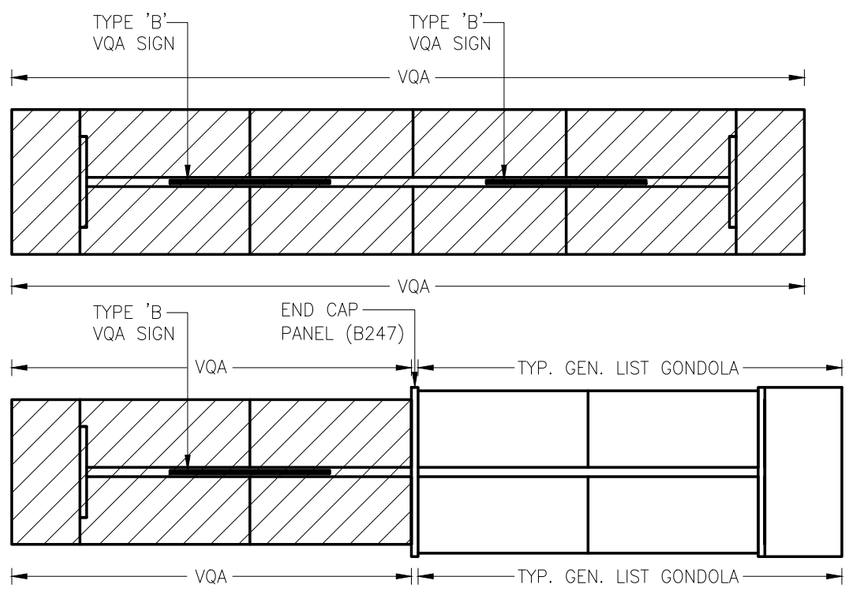

LCBO	B500 VQA	REVISION DATE	REV.	1 of 1	ISSUE DATE	STORE TYPE	STORE #
	VQA GONDOLA SIGNAGE - TYPE B (4-HIGH)	2019 NOV	01	B508	2019 NOV		312

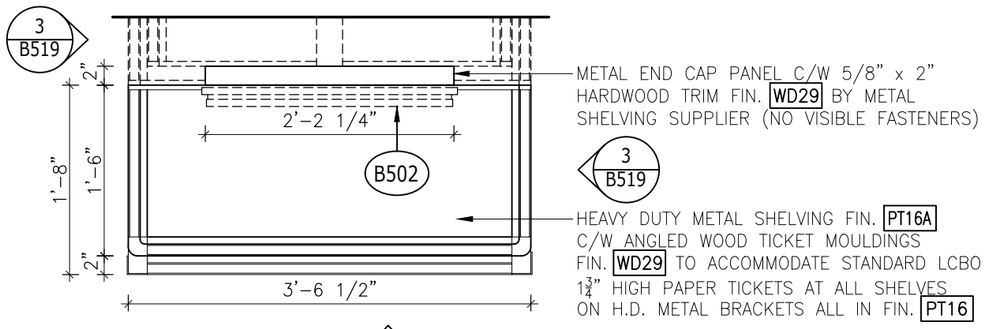

1 B519 PLAN 3/4" = 1'-0"

2 B519

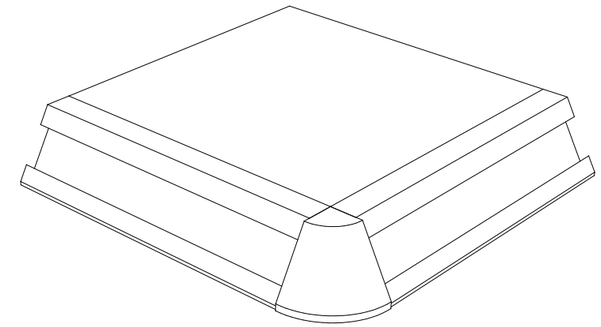

5 B519 END SHELF DETAIL N.T.S.

NOTE:
SOLID WOOD GRADE TO BE FAS

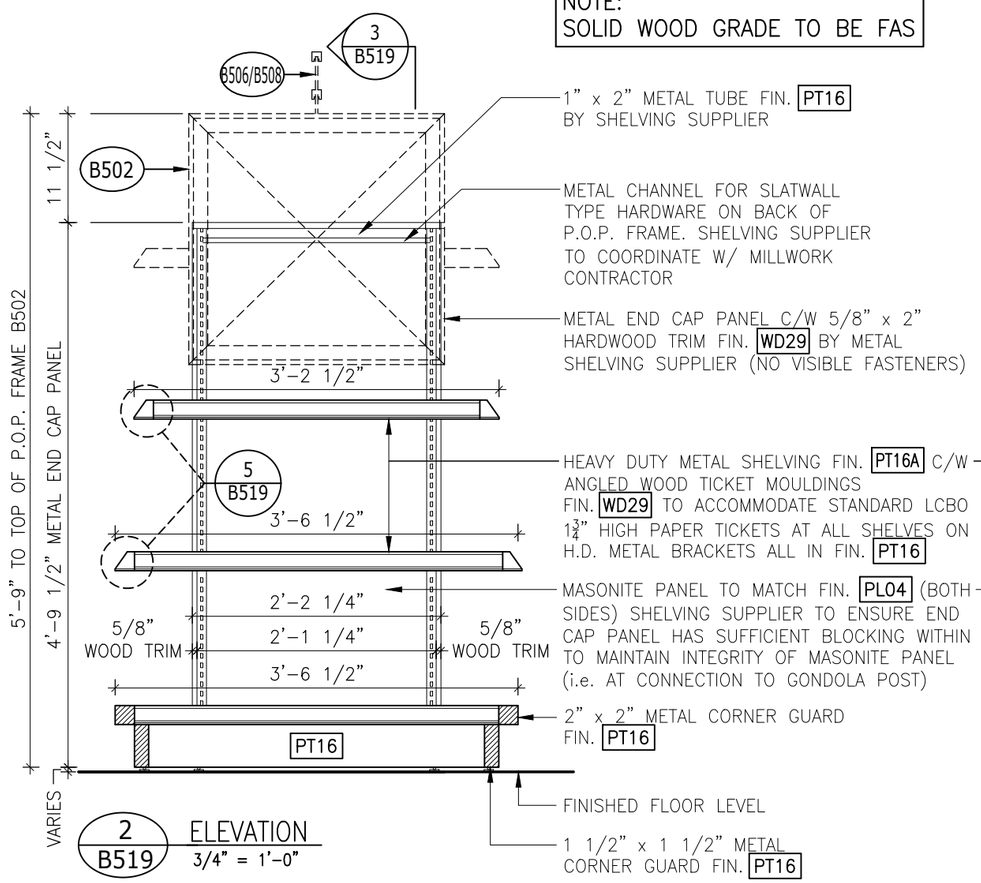

2 B519 ELEVATION 3/4" = 1'-0"

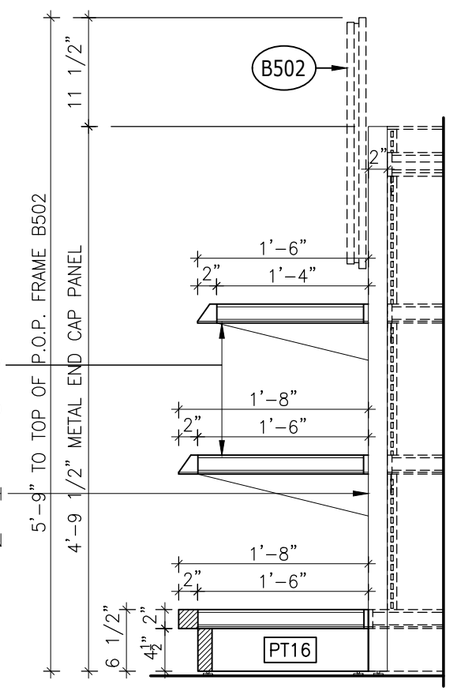

3 B519 ELEVATION 3/4" = 1'-0"

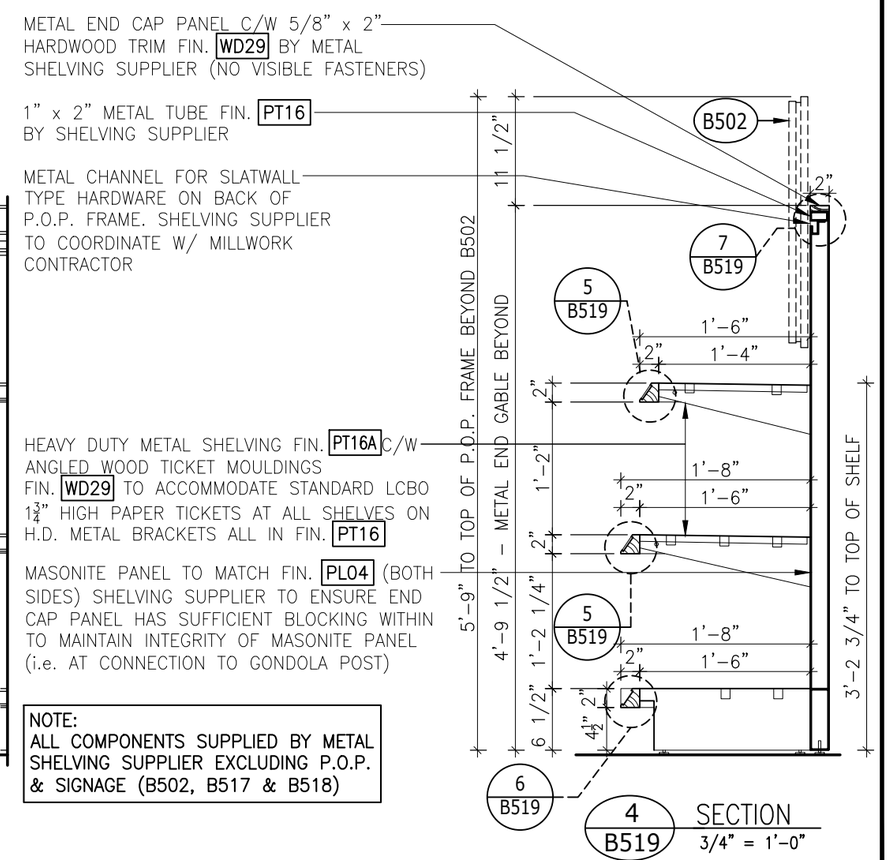

4 B519 SECTION 3/4" = 1'-0"

NOTE:
ALL COMPONENTS SUPPLIED BY METAL SHELVING SUPPLIER EXCLUDING P.O.P. & SIGNAGE (B502, B517 & B518)

LCBO	B500 VQA	REVISION DATE	REV.	1 of 2	ISSUE DATE	STORE TYPE	STORE #
	4-HIGH VQA METAL GONDOLA END	2019 NOV	01	B519	2019 NOV		312

NOTE:
METAL SHELVING SUPPLIER TO SUPPLY HARDWOOD TICKET MOULDINGS

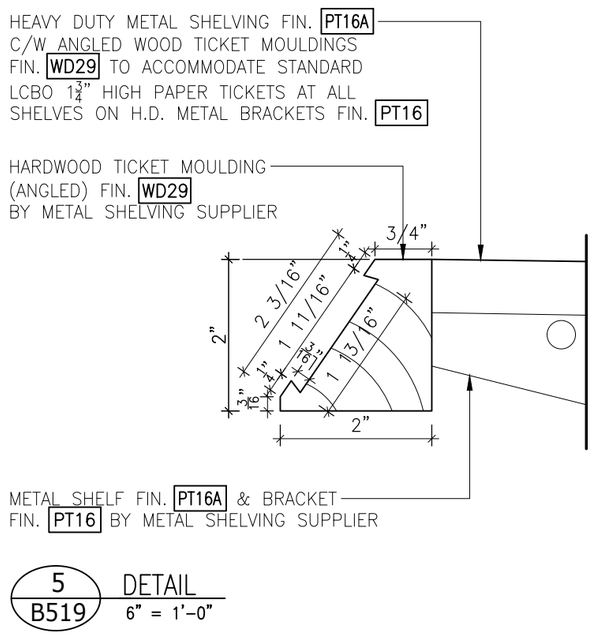

5 / B519 DETAIL
6" = 1'-0"

NOTE:
SOLID WOOD GRADE TO BE FAS

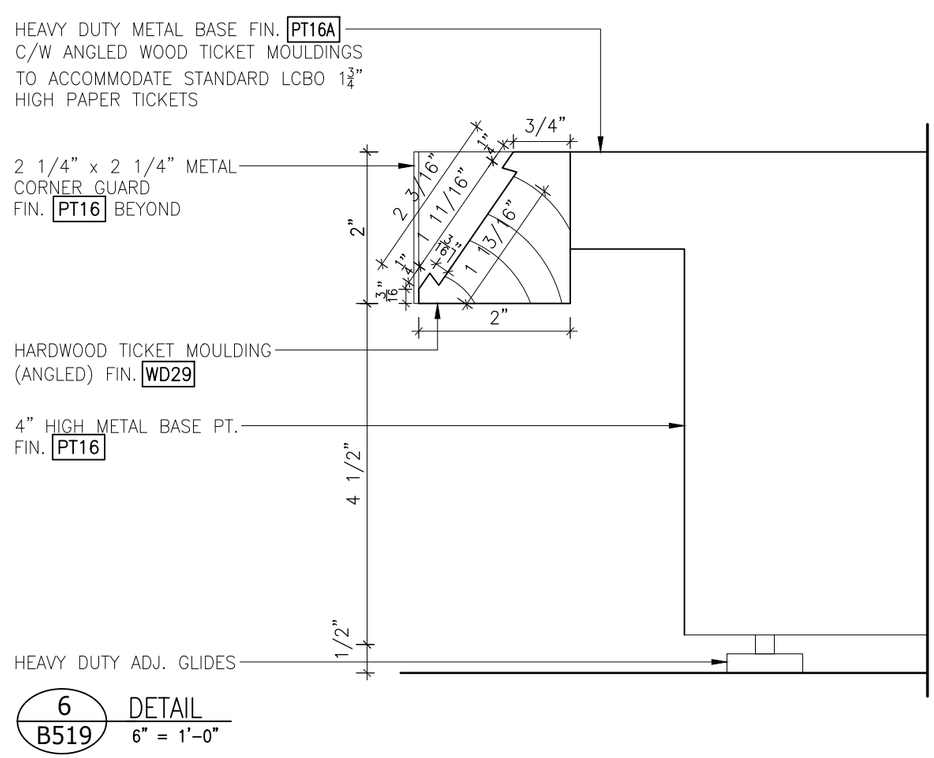

6 / B519 DETAIL
6" = 1'-0"

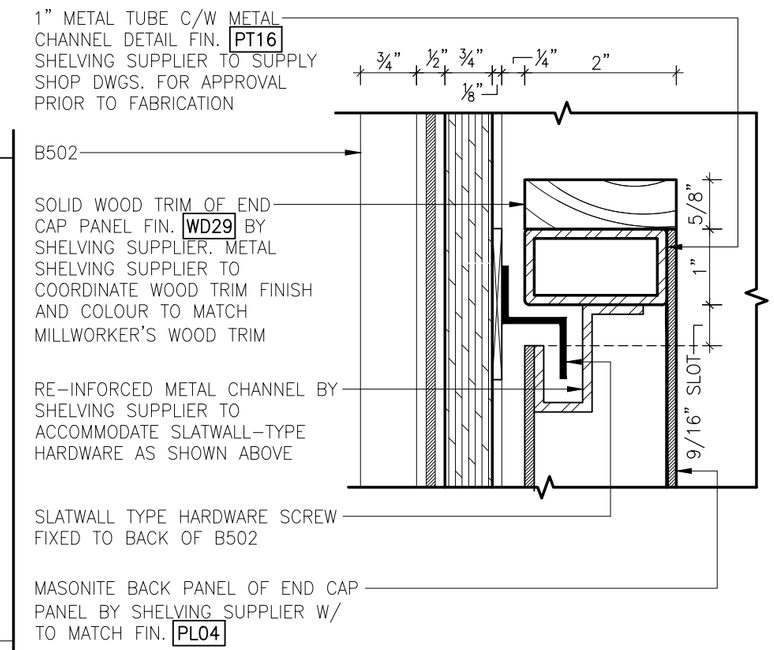

7 / B519 DETAIL
6" = 1'-0"

LCBO	B500 VQA	REVISION DATE	REV.	2 of 2	ISSUE DATE	STORE TYPE	STORE #
	4-HIGH VQA METAL GONDOLA END	2019 NOV	01	B519	2019 NOV		312

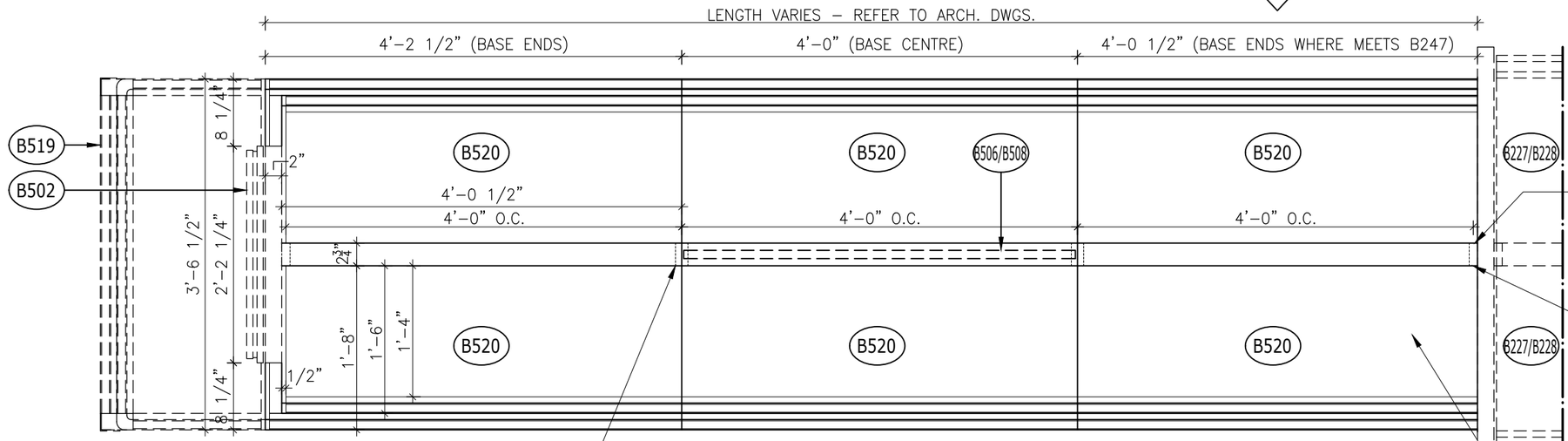

1 B520 PLAN
3/4" = 1'–0"

NOTE:
ALL COMPONENTS SUPPLIED BY METAL SHELVING SUPPLIER EXCLUDING P.O.P. & SIGNAGE (B502, B517 & B518)

2 3/4" x 1" x 57 5/8" HIGH HEAVY DUTY SLOTTED METAL END POST (SLOTS AT 1" O.C. TYP.) FIN. PT16

ALL END POSTS TO BE MODIFIED AS REQUIRED TO ENSURE THAT THERE ARE NO GAPS BETWEEN METAL SHELVES AND END GABLES (FILLER STRIPS ARE NOT ACCEPTABLE)

HEAVY DUTY METAL SHELVING FIN. PT16A C/W ANGLED WOOD TICKET MOULDINGS FIN. WD29 TO ACCOMMODATE STANDARD LCBO 1¾" HIGH PAPER TICKETS AT ALL SHELVES ON H.D. METAL BRACKETS FIN. PT16

NOTE:
SOLID WOOD GRADE TO BE FAS

HARDWOOD EDGE/RETURN ON SHELVES NOT REQUIRED WHERE SHELF MEETS METAL END GABLE

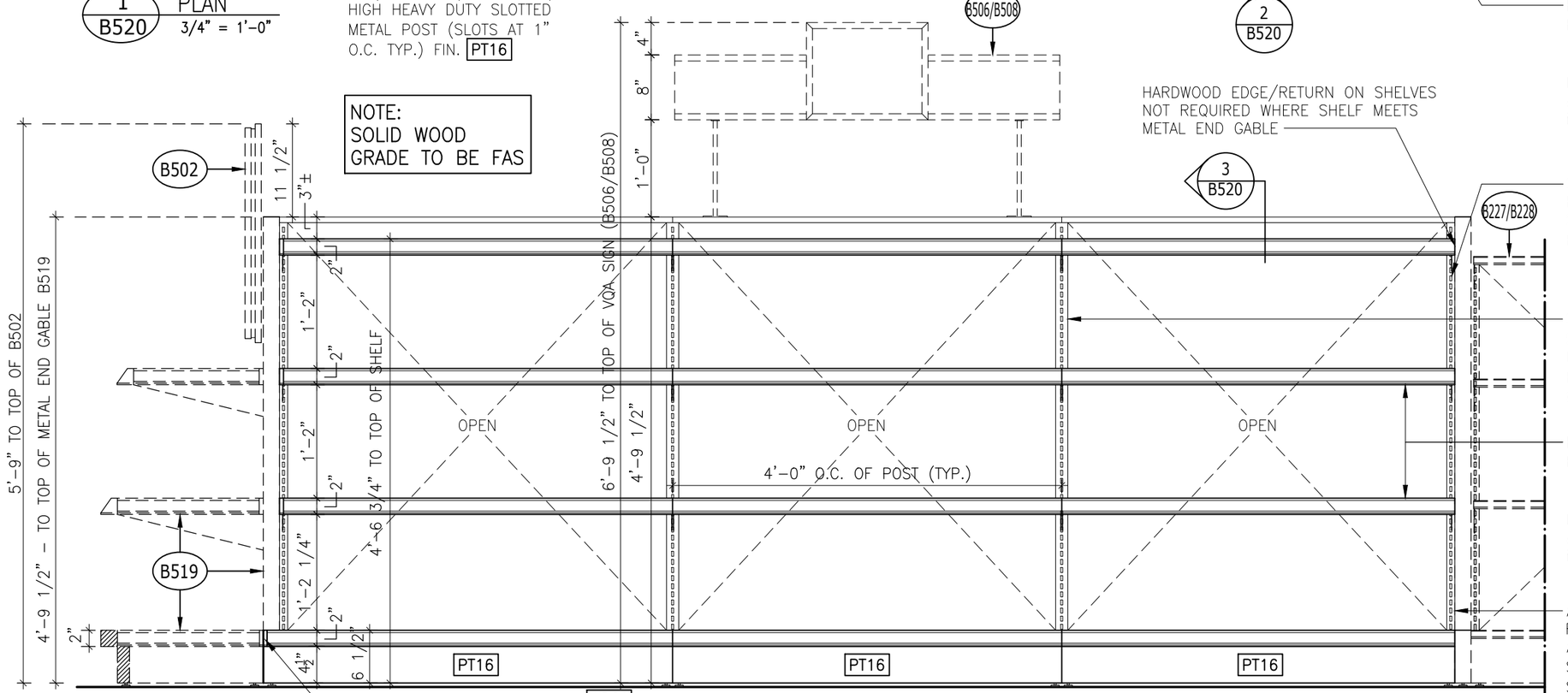

2 B520 ELEVATION
3/4" = 1'–0"

PROVIDE ROUNDED EDGES FIN. WD29 AT END OF BASE TICKET MOULDINGS WHERE BASE MEETS GONDOLA END CAP PANEL

2 3/4" x 1" x 57 5/8" HIGH HEAVY DUTY SLOTTED METAL END POST (SLOTS AT 1" O.C. TYP.) FIN. PT16

2 3/4" x 1 1/2" x 57 5/8" HIGH HEAVY DUTY SLOTTED METAL POST (SLOTS AT 1" O.C. TYP.) FIN. PT16

HEAVY DUTY METAL SHELVING FIN. PT16A C/W ANGLED WOOD TICKET MOULDINGS FIN. WD29 TO ACCOMMODATE STANDARD LCBO 1¾" HIGH PAPER TICKETS AT ALL SHELVES ON H.D. METAL BRACKETS FIN. PT16

ALL END POSTS TO BE MODIFIED AS REQUIRED TO ENSURE THAT THERE ARE NO GAPS BETWEEN METAL SHELVES AND END GABLES (FILLER STRIPS ARE NOT ACCEPTABLE)

LCBO	B500 VQA	REVISION DATE	REV.	1 of 2	ISSUE DATE	STORE TYPE	STORE #
	VQA 4-HIGH 4'-0" METAL FLOOR GONDOLA	2019 NOV	01	B520	2019 NOV		312

NOTE:
SOLID WOOD GRADE TO BE FAS

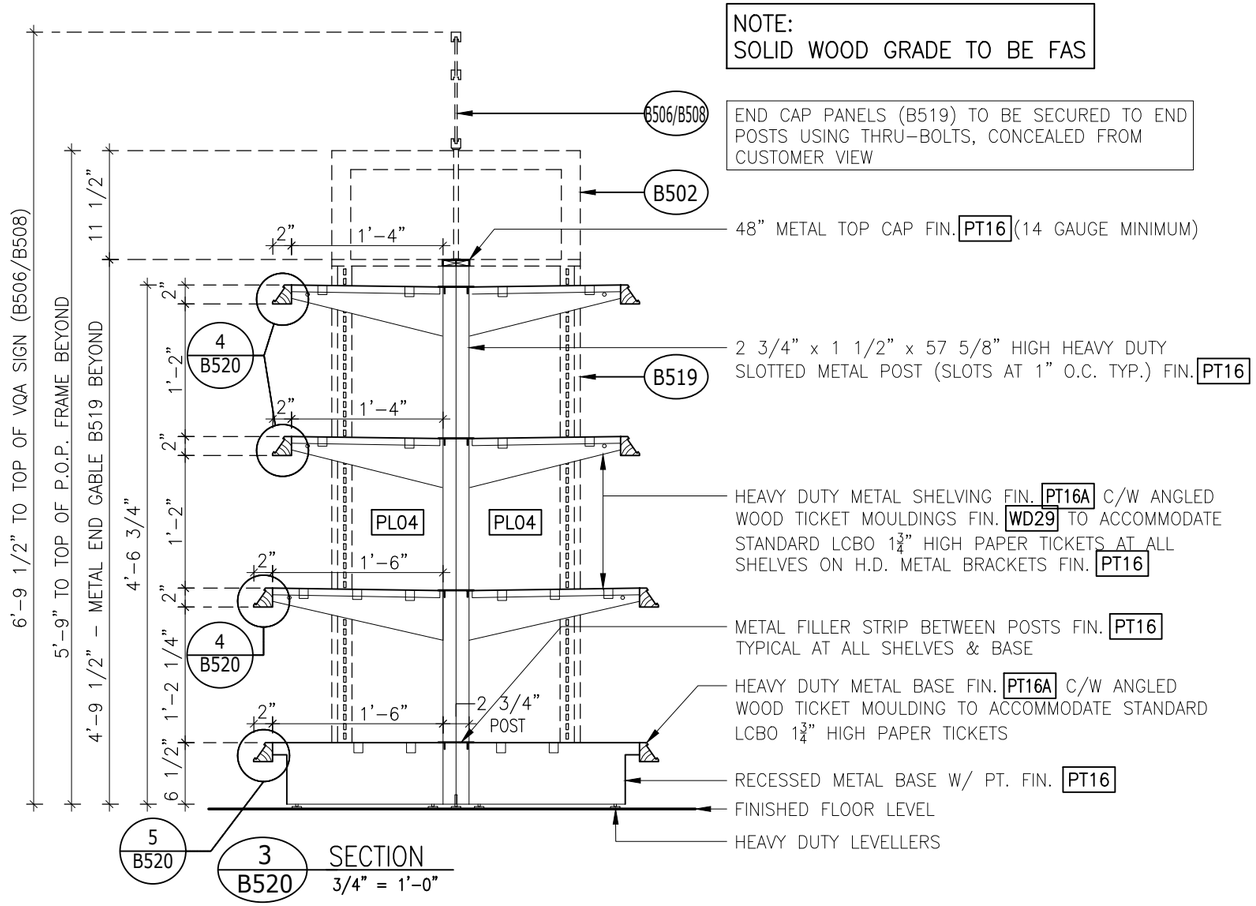

3 B520 SECTION
3/4" = 1'-0"

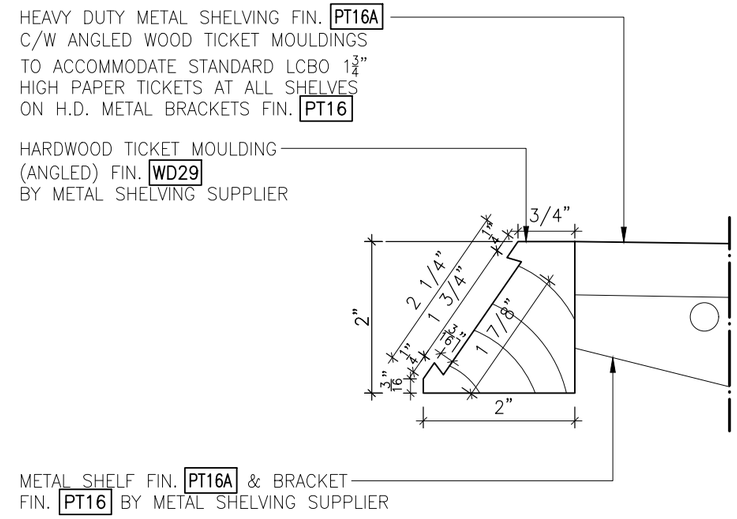

4 B520 DETAIL
6" = 1'-0"

NOTE:
METAL SHELVING SUPPLIER TO SUPPLY HARDWOOD TICKET MOULDINGS

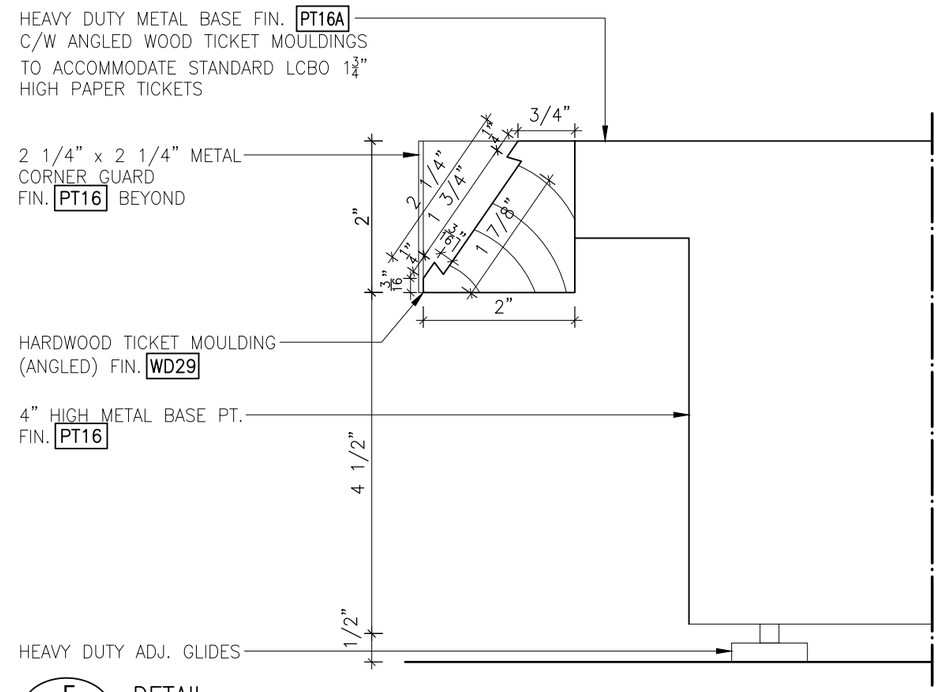

5 B520 DETAIL
6" = 1'-0"

LCBO	B500 VQA	REVISION DATE	REV.	2 of 2	ISSUE DATE	STORE TYPE	STORE #
	VQA 4-HIGH 4'-0" METAL FLOOR GONDOLA	2019 NOV	01	B520	2019 NOV		312

NOTE:
SOLID WOOD GRADE TO BE FAS

NOTE:
ALL COMPONENTS SUPPLIED BY METAL SHELVING SUPPLIER EXCLUDING P.O.P. & SIGNAGE (B502, B517 & B518)

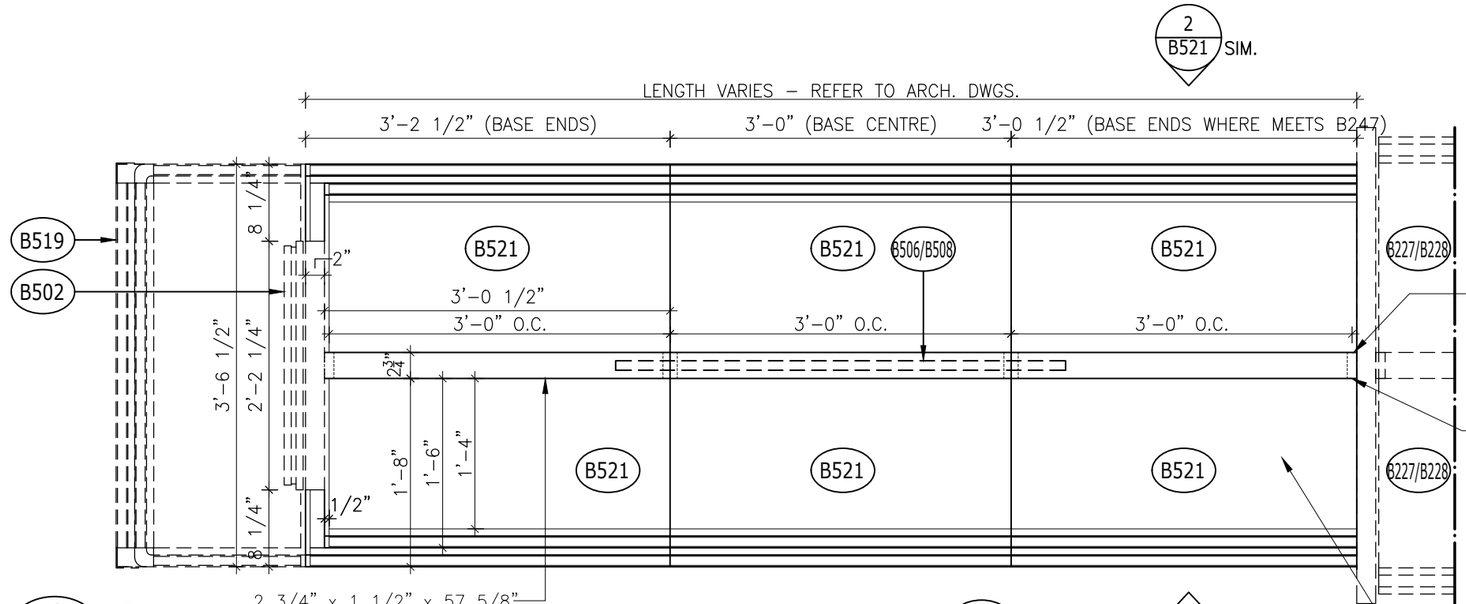

1 B521 PLAN 3/4" = 1'-0"

2 3/4" x 1 1/2" x 57 5/8" HIGH HEAVY DUTY SLOTTED METAL POST (SLOTS AT 1" O.C. TYP.) FIN. PT16

2 3/4" x 1" x 57 5/8" HIGH HEAVY DUTY SLOTTED METAL END POST (SLOTS AT 1" O.C. TYP.) FIN. PT16

ALL END POSTS TO BE MODIFIED AS REQUIRED TO ENSURE THAT THERE ARE NO GAPS BETWEEN METAL SHELVES AND END GABLES (FILLER STRIPS ARE NOT ACCEPTABLE)

HEAVY DUTY METAL SHELVING FIN. PT16A C/W ANGLED WOOD TICKET MOULDINGS FIN. WD29 TO ACCOMMODATE STANDARD LCBO 1¾" HIGH PAPER TICKETS AT ALL SHELVES ON H.D. METAL BRACKETS FIN. PT16

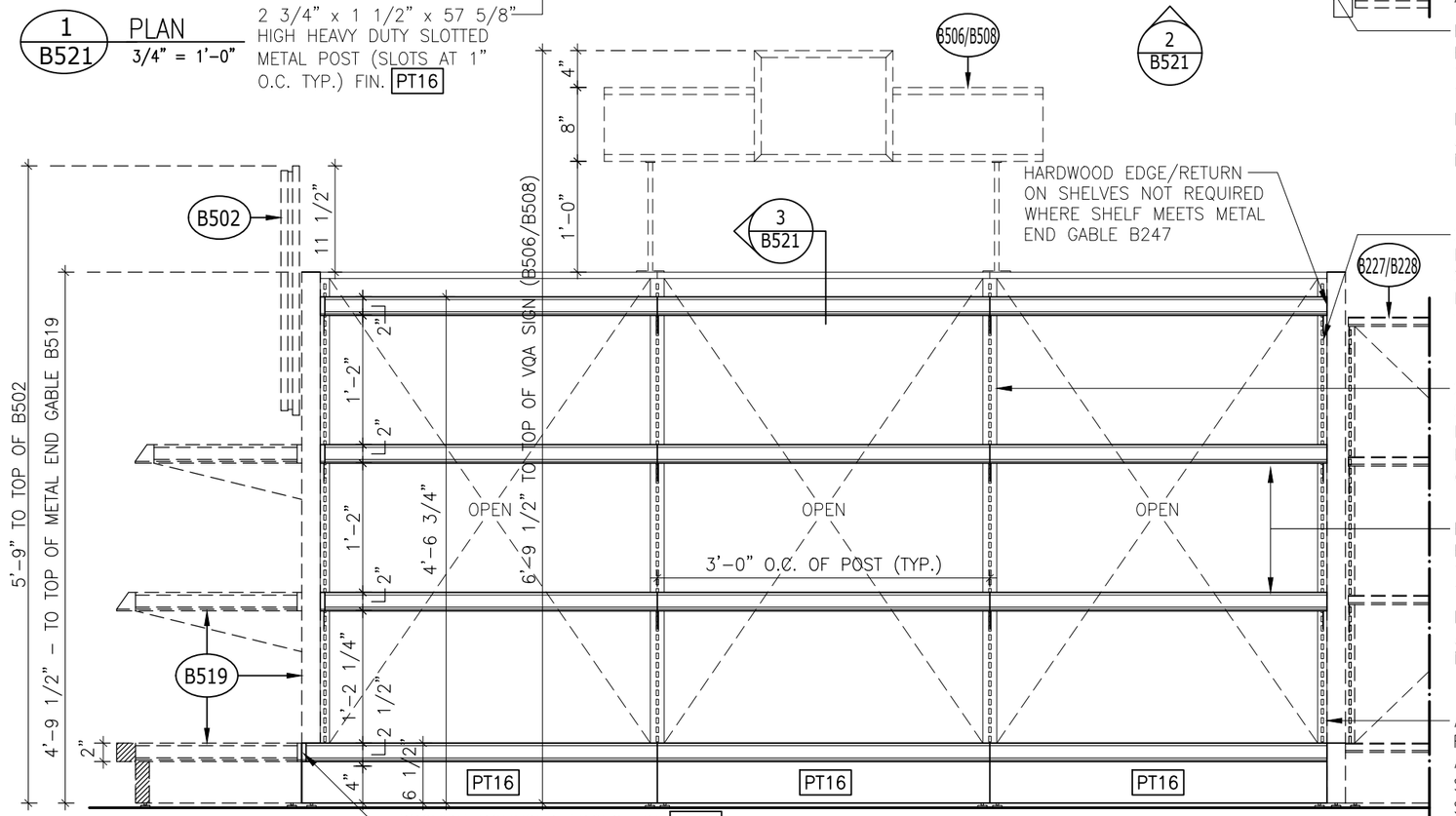

HARDWOOD EDGE/RETURN ON SHELVES NOT REQUIRED WHERE SHELF MEETS METAL END GABLE B247

2 3/4" x 1" x 57 5/8" HIGH HEAVY DUTY SLOTTED METAL END POST (SLOTS AT 1" O.C. TYP.) FIN. PT16

2 3/4" x 1 1/2" x 57 5/8" HIGH HEAVY DUTY SLOTTED METAL POST (SLOTS AT 1" O.C. TYP.) FIN. PT16

HEAVY DUTY METAL SHELVING FIN. PT16A C/W ANGLED WOOD TICKET MOULDINGS FIN. WD29 TO ACCOMMODATE STANDARD LCBO 1¾" HIGH PAPER TICKETS AT ALL SHELVES ON H.D. METAL BRACKETS FIN. PT16

ALL END POSTS TO BE MODIFIED AS REQUIRED TO ENSURE THAT THERE ARE NO GAPS BETWEEN METAL SHELVES AND END GABLES (FILLER STRIPS ARE NOT ACCEPTABLE)

PROVIDE ROUNDED EDGES FIN. WD29 AT END OF BASE TICKET MOULDINGS WHERE BASE MEETS GONDOLA END CAP PANEL

2 B521 ELEVATION 3/4" = 1'-0"

LCBO	B500 VQA	REVISION DATE	REV.	1 of 2	ISSUE DATE	STORE TYPE	STORE #
	VQA 4-HIGH 3'-0" METAL FLOOR GONDOLA	2019 NOV	01	B521	2019 NOV		312

NOTE:
SOLID WOOD GRADE TO BE FAS

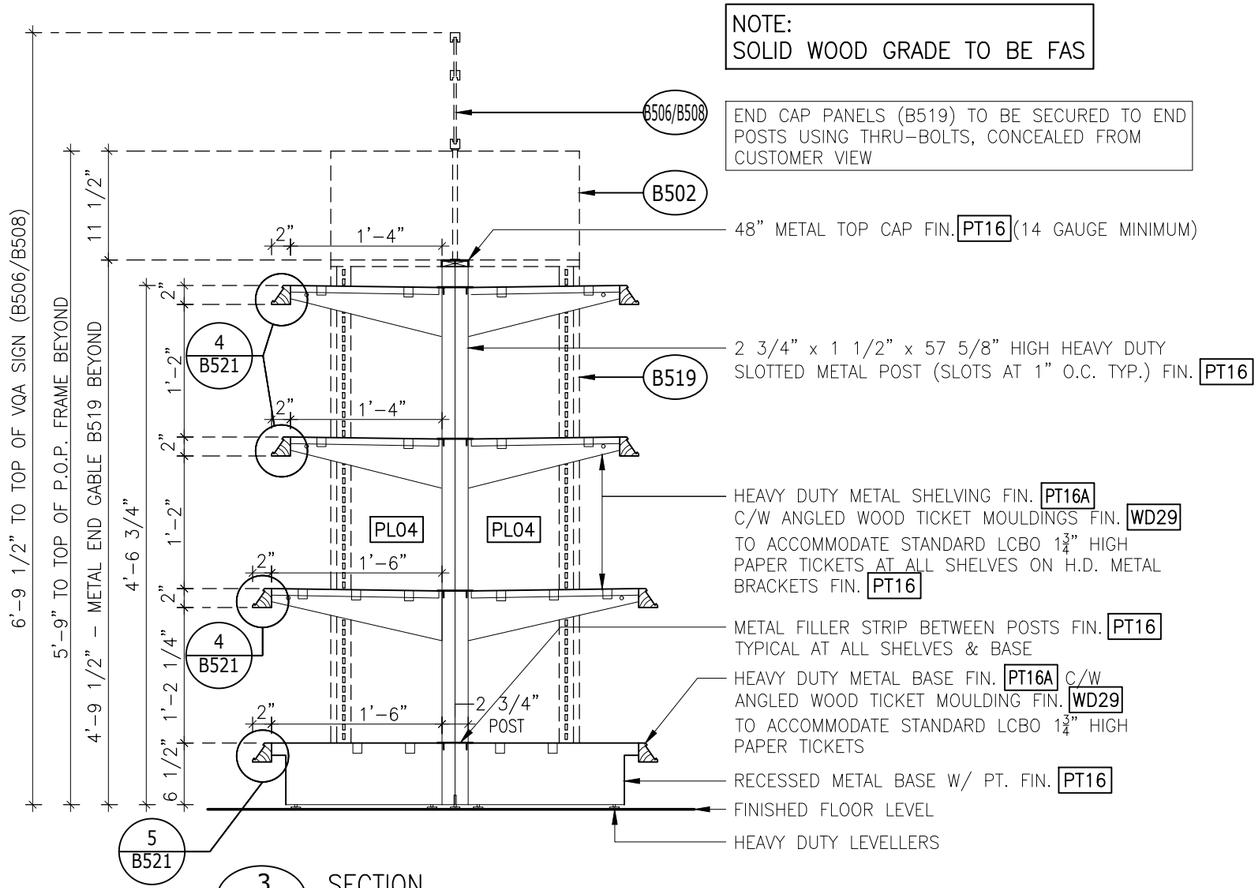

3 B521 SECTION
3/4" = 1'-0"

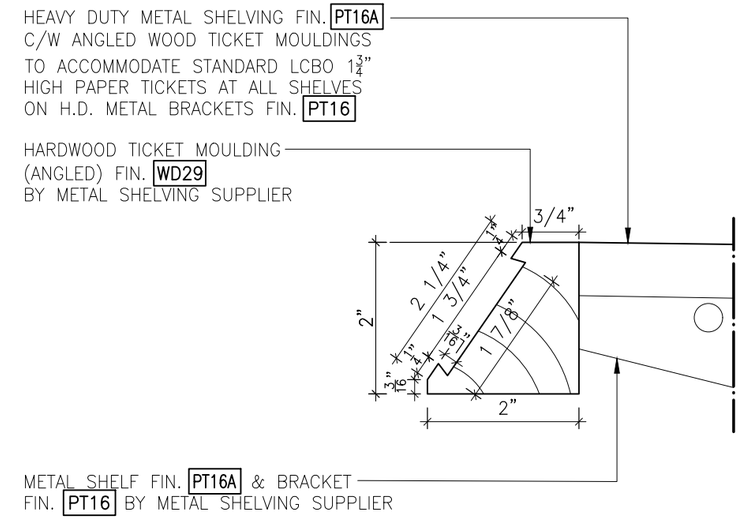

4 B521 DETAIL
6" = 1'-0"

NOTE:
METAL SHELVING SUPPLIER TO SUPPLY HARDWOOD TICKET MOULDINGS

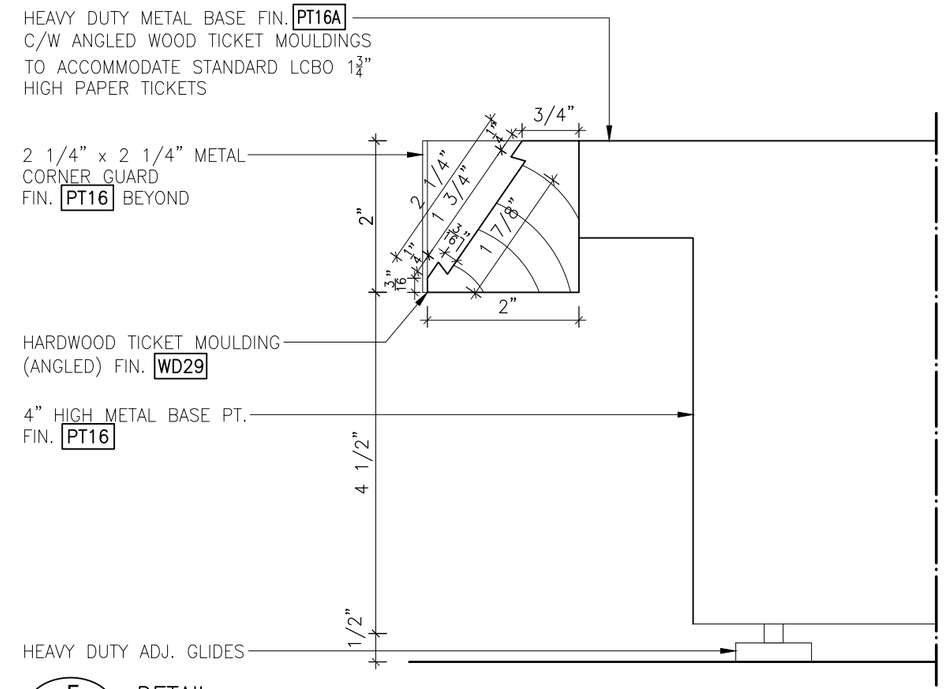

5 B521 DETAIL
6" = 1'-0"

LCBO	B500 VQA	REVISION DATE	REV.	2 of 2	ISSUE DATE	STORE TYPE	STORE #
	VQA 4-HIGH 3'-0" METAL FLOOR GONDOLA	2019 NOV	01	B521	2019 NOV		312

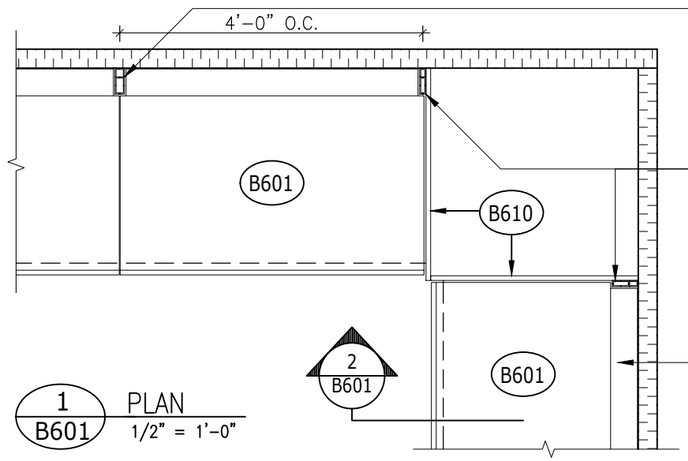

1 B601 PLAN
1/2" = 1'-0"

4 1/8" x 1 1/2" x 7'-0" HIGH HEAVY DUTY SLOTTED METAL POST (SLOTS AT 1" O.C. TYP.) FIN. PT24

ALL END POSTS TO BE MODIFIED AS REQUIRED TO ENSURE THAT THERE ARE NO GAPS BETWEEN METAL SHELVES AND END GABLES (FILLER STRIPS ARE NOT ACCEPTABLE) FIN. PT24

FRICTION-FIT METAL FILLER STRIP FIN. PT24 BETWEEN POSTS (APPROXIMATELY 4" DP.)

UNDERSIDE OF CEILING

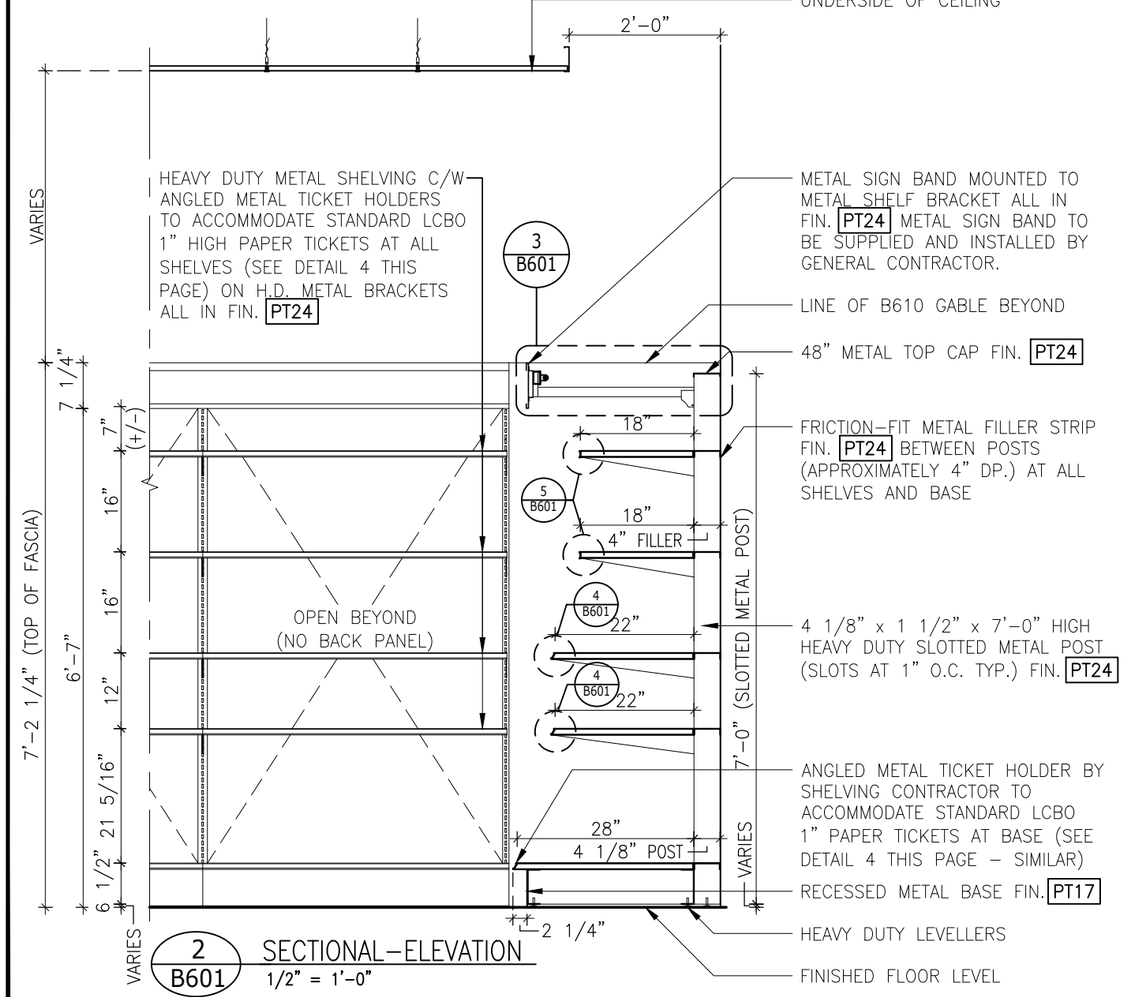

2 B601 SECTIONAL-ELEVATION
1/2" = 1'-0"

NOTE:
GC TO ENSURE THAT METAL SIGN BAND IS TRUE AND LEVEL AND CONSTRUCTED IN MINIMUM 8'-0" LENGTHS EXCEPT AT END RUNS AS REQUIRED

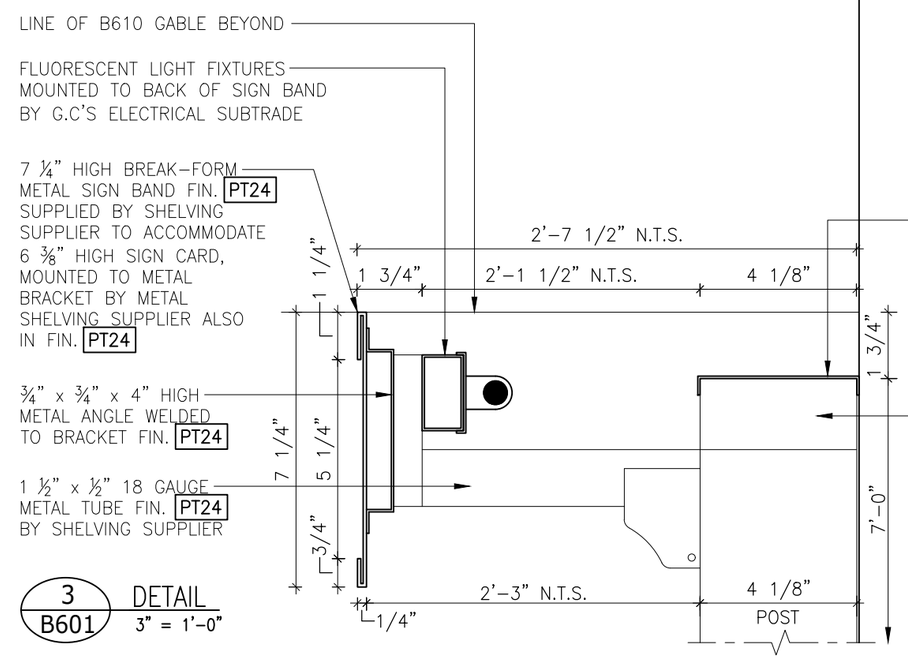

3 B601 DETAIL
3" = 1'-0"

NOTE:
ALL 1" METAL TICKET HOLDERS TO RECEIVE 1¾" PLASTIC TICKET HOLDER INSERT TO SPAN LENGTH OF SHELF SECTION

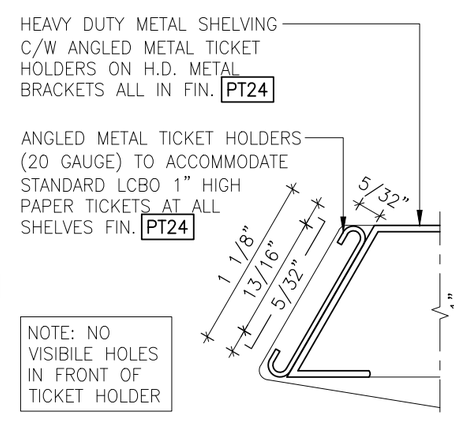

4 B601 ANGLED METAL TICKET HOLDER DETAIL
FULL SCALE

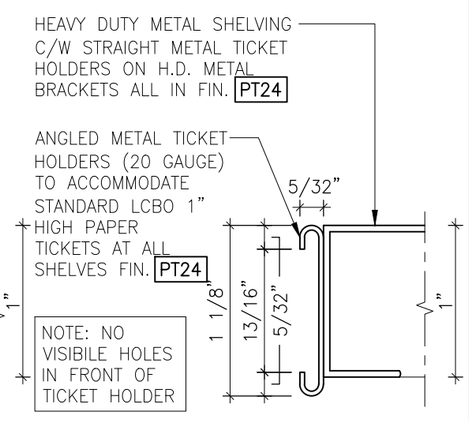

5 B601 STRAIGHT METAL TICKET HOLDER DETAIL
FULL SCALE

GENERAL NOTES

DIMENSIONS SHOWN REFLECT SHELF & BASE DIMENSIONS ONLY & DO NOT TAKE METAL TICKET HOLDERS INTO ACCOUNT

ALL ADJUSTMENTS TO COMPENSATE FOR NON-LEVEL FLOOR SURFACES TO BE MADE AT BOTTOM END OF POST

GC TO CO-ORDINATE INSTALLATION

T5 FLUORESCENT LIGHT FIXTURES TO BE SUPPLIED & INSTALLED BY G.C.

GC TO OBTAIN SIGNAGE SAMPLE FROM LCBO PRIOR TO FABRICATION TO ENSURE PROPER FIT OF SIGNAGE INSERT

SHELVING SUPPLIER TO OBTAIN 1" HIGH PAPER TICKET SAMPLE FROM LCBO PRIOR TO FABRICATION TO ENSURE PROPER FIT WITHIN TICKET MOULDING. SUBMIT SAMPLE FOR APPROVAL

GC TO ENSURE ALL SHELVES ARE IN EXACT ALIGNMENT AND ARE TRUE & LEVEL. PERFORATED SHELVES ARE ACCEPTABLE. SHELVES TO SUPPORT LOAD CAPACITY OF 500LBS

ALL END POSTS TO BE MODIFIED AS REQUIRED TO ENSURE THAT THERE ARE NO GAPS BETWEEN METAL SHELVES AND END GABLES (FILLER STRIPS ARE NOT ACCEPTABLE)

LCBO	B600 WALK-IN COLDROOM	REVISION DATE	REV.	1 of 1	ISSUE DATE	STORE TYPE	STORE #
	4'-0" WALK-IN COLDROOM PERIMETER METAL SHELVING UNIT	2019 NOV	01	B601	2019 NOV		312

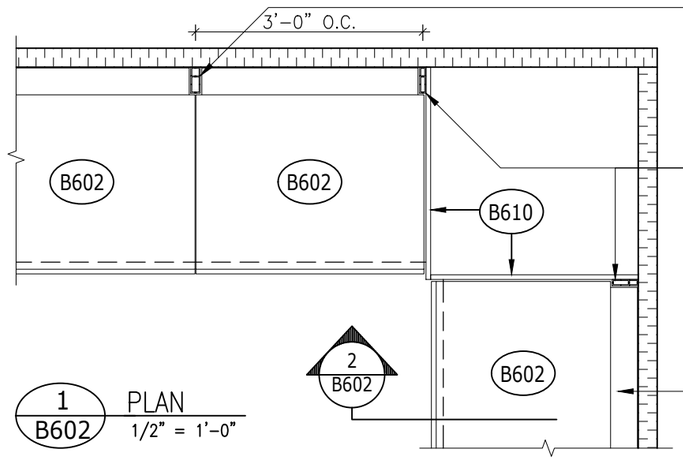

1 B602 PLAN 1/2" = 1'-0"

4 1/8" x 1 1/2" x 7'-0" HIGH HEAVY DUTY SLOTTED METAL POST (SLOTS AT 1" O.C. TYP.) FIN. PT24

ALL END POSTS TO BE MODIFIED AS REQUIRED TO ENSURE THAT THERE ARE NO GAPS BETWEEN METAL SHELVES AND END GABLES (FILLER STRIPS ARE NOT ACCEPTABLE) FIN. PT24

FRICTION-FIT METAL FILLER STRIP FIN. PT24 BETWEEN POSTS (APPROXIMATELY 4" DP.)

NOTE:
GC TO ENSURE THAT METAL SIGN BAND IS TRUE AND LEVEL AND CONSTRUCTED IN MINIMUM 8'-0" LENGTHS EXCEPT AT END RUNS AS REQUIRED

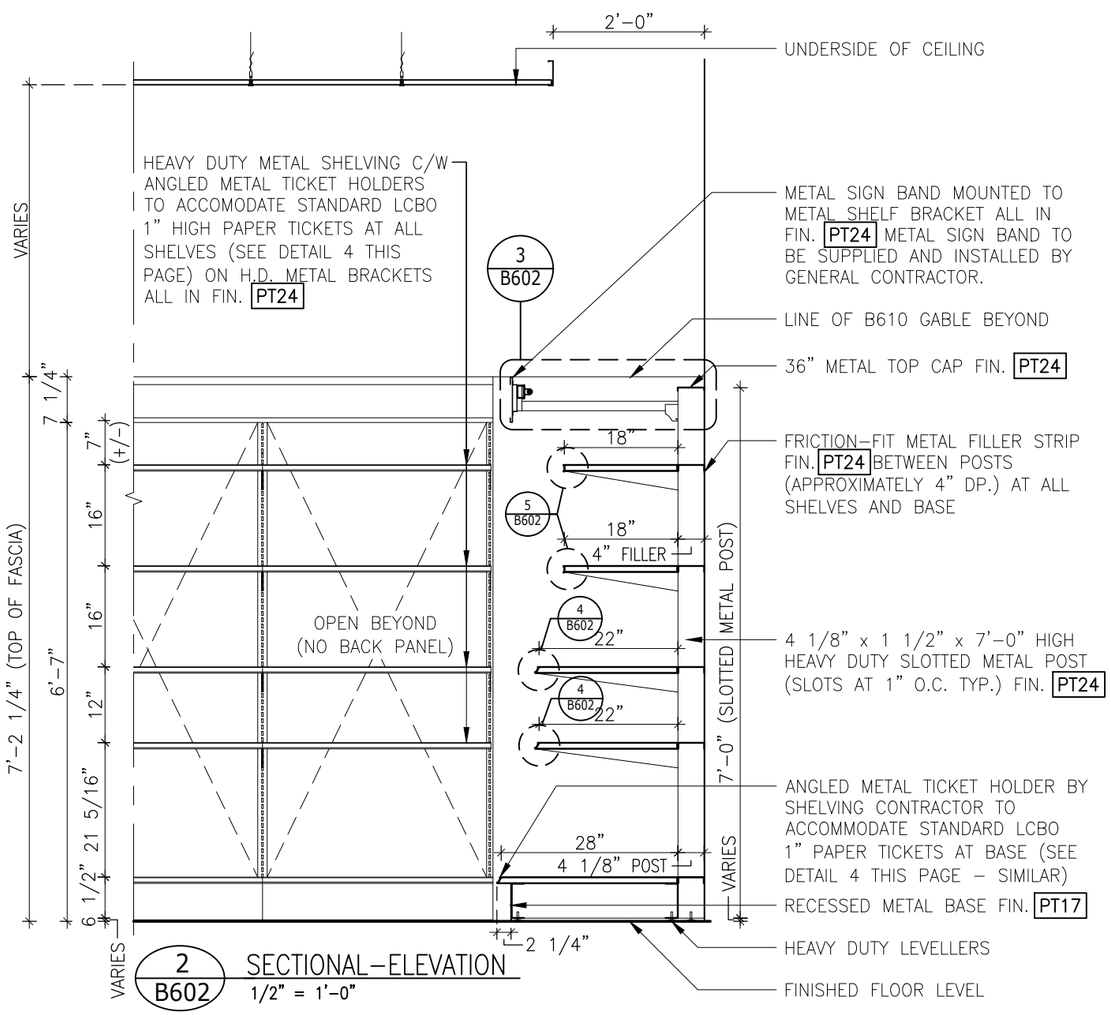

2 B602 SECTIONAL-ELEVATION 1/2" = 1'-0"

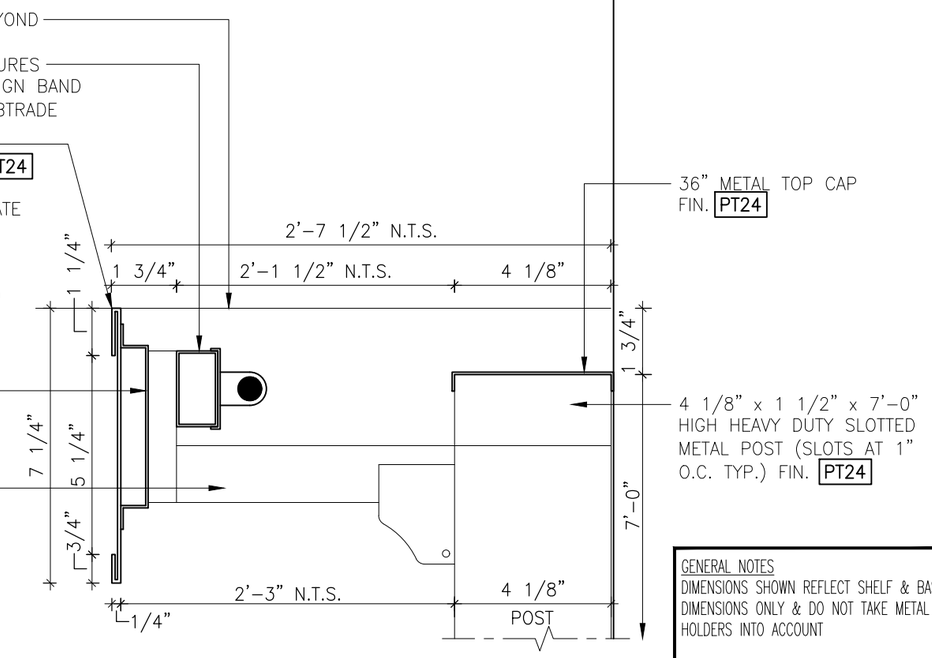

3 B602 DETAIL 3" = 1'-0"

NOTE:
ALL 1" METAL TICKET HOLDERS TO RECEIVE 1¾" PLASTIC TICKET HOLDER INSERT TO SPAN LENGTH OF SHELF SECTION

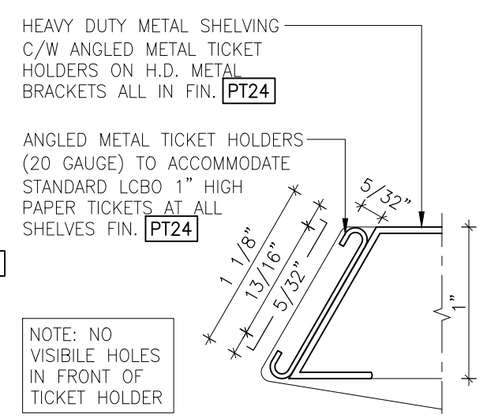

4 B602 ANGLED METAL TICKET HOLDER DETAIL FULL SCALE

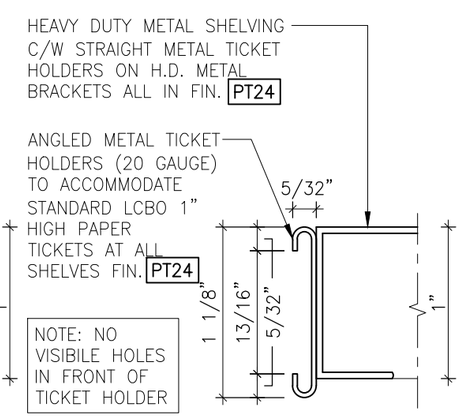

5 B602 STRAIGHT METAL TICKET HOLDER DETAIL FULL SCALE

GENERAL NOTES

DIMENSIONS SHOWN REFLECT SHELF & BASE DIMENSIONS ONLY & DO NOT TAKE METAL TICKET HOLDERS INTO ACCOUNT

ALL ADJUSTMENTS TO COMPENSATE FOR NON-LEVEL FLOOR SURFACES TO BE MADE AT BOTTOM END OF POST

GC TO CO-ORDINATE INSTALLATION

T5 FLUORESCENT LIGHT FIXTURES TO BE SUPPLIED & INSTALLED BY G.C.

GC TO OBTAIN SIGNAGE SAMPLE FROM LCBO PRIOR TO FABRICATION TO ENSURE PROPER FIT OF SIGNAGE INSERT

SHELVING SUPPLIER TO OBTAIN 1" HIGH PAPER TICKET SAMPLE FROM LCBO PRIOR TO FABRICATION TO ENSURE PROPER FIT WITHIN TICKET MOULDING. SUBMIT SAMPLE FOR APPROVAL

GC TO ENSURE ALL SHELVES ARE IN EXACT ALIGNMENT AND ARE TRUE & LEVEL. PERFORATED SHELVES ARE ACCEPTABLE. SHELVES TO SUPPORT LOAD CAPACITY OF 500LBS

ALL END POSTS TO BE MODIFIED AS REQUIRED TO ENSURE THAT THERE ARE NO GAPS BETWEEN METAL SHELVES AND END GABLES (FILLER STRIPS

LCBO	B600 WALK-IN COLDROOM	REVISION DATE	REV.	1 of 1	ISSUE DATE	STORE TYPE	STORE #
	3'-0" WALK-IN COLDROOM PERIMETER METAL SHELVING UNIT	2019 NOV	01	B602	2019 NOV		312

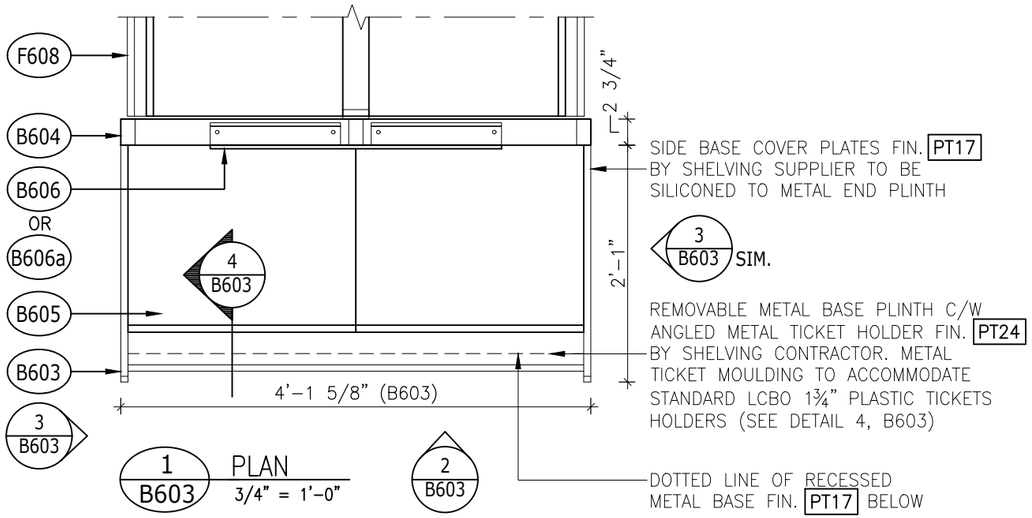

GENERAL NOTES

- DIMENSIONS SHOWN REFLECT SHELF & BASE DIMENSIONS ONLY & DO NOT TAKE METAL TICKET HOLDERS INTO ACCOUNT
- SHELVING SUPPLIER TO OBTAIN 1¾" HIGH PLASTIC TICKET HOLDER SAMPLE FROM LCBO PRIOR TO FABRICATION TO ENSURE PROPER FIT WITHIN METAL TICKET MOULDING. SUBMIT SAMPLE FOR APPROVAL
- PERFORATIONS IN REMOVABLE PLINTH ARE NOT ACCEPTABLE

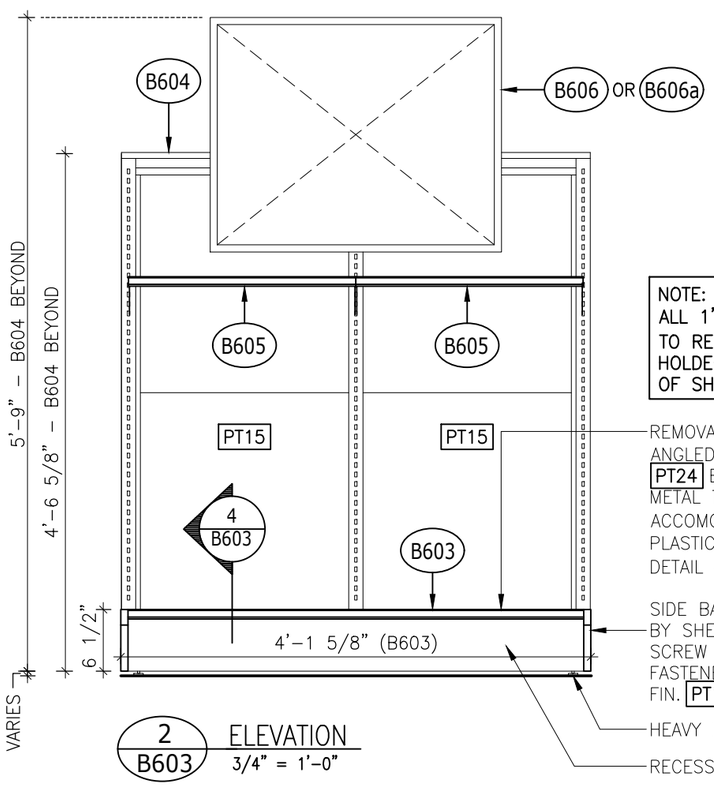

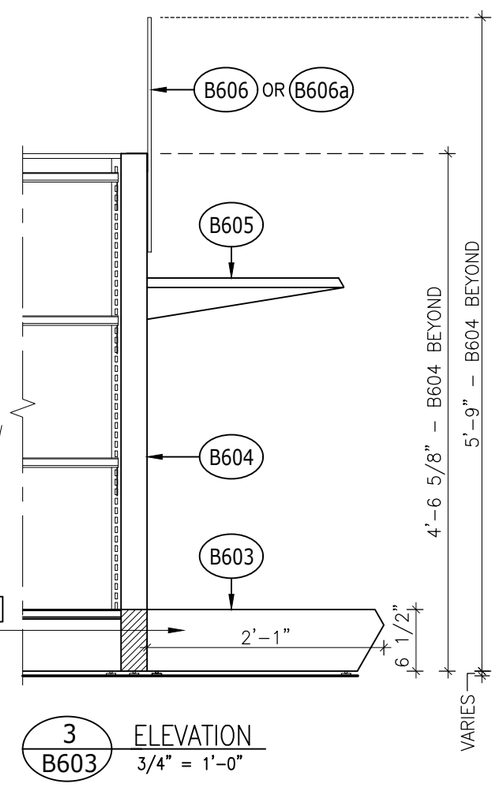

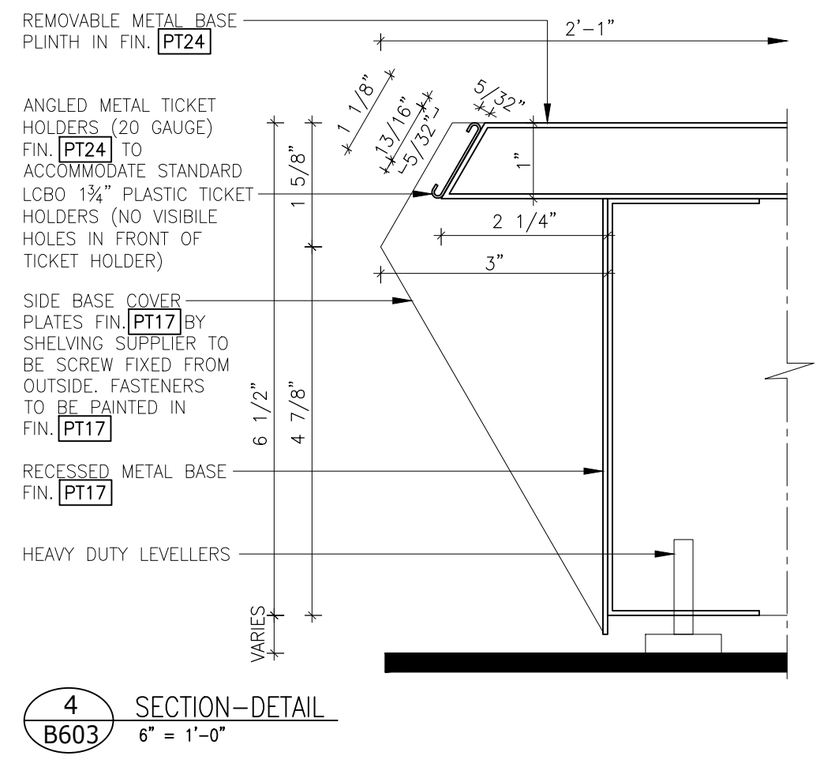

LCBO	B600 WALK-IN COLDROOM	REVISION DATE	REV.	1 of 1	ISSUE DATE	STORE TYPE	STORE #
	WALK-IN COLDROOM END PLINTH	2019 NOV	01	B603	2019 NOV		312

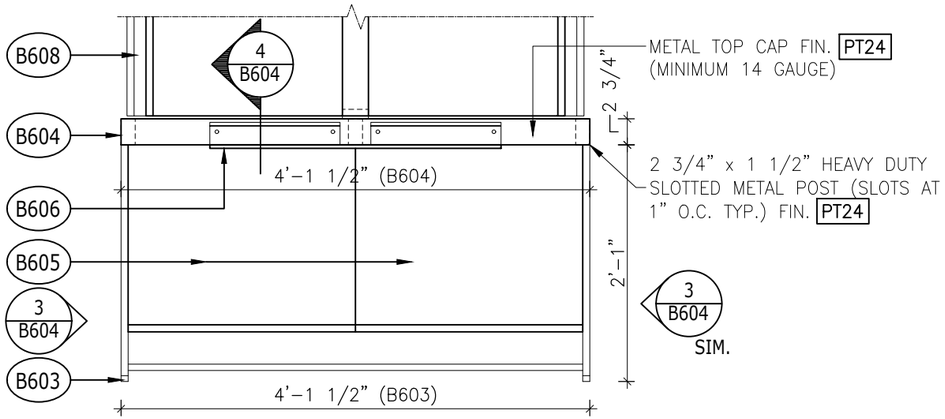

1 B604 PLAN
3/4" = 1'-0"

GENERAL NOTES

- GC TO CO-ORDINATE INSTALLATION
- END CAP PANELS (B604) TO BE SECURED TO END POSTS USING THRU-BOLTS, CONCEALED FROM CUSTOMER VIEW. METAL SHELVING SUPPLIER TO ENSURE END CAP PANEL HAS SUFFICIENT BLOCKING WITHIN TO MAINTAIN INTEGRITY OF MASONITE PANEL.
- INSERT PANEL END CAP TO BE METAL OR ANTIBACTERIAL/ WATER-RESISTANT MASONITE (FIBREX OR APPROVED EQUAL) TO MATCH FIN. PT15

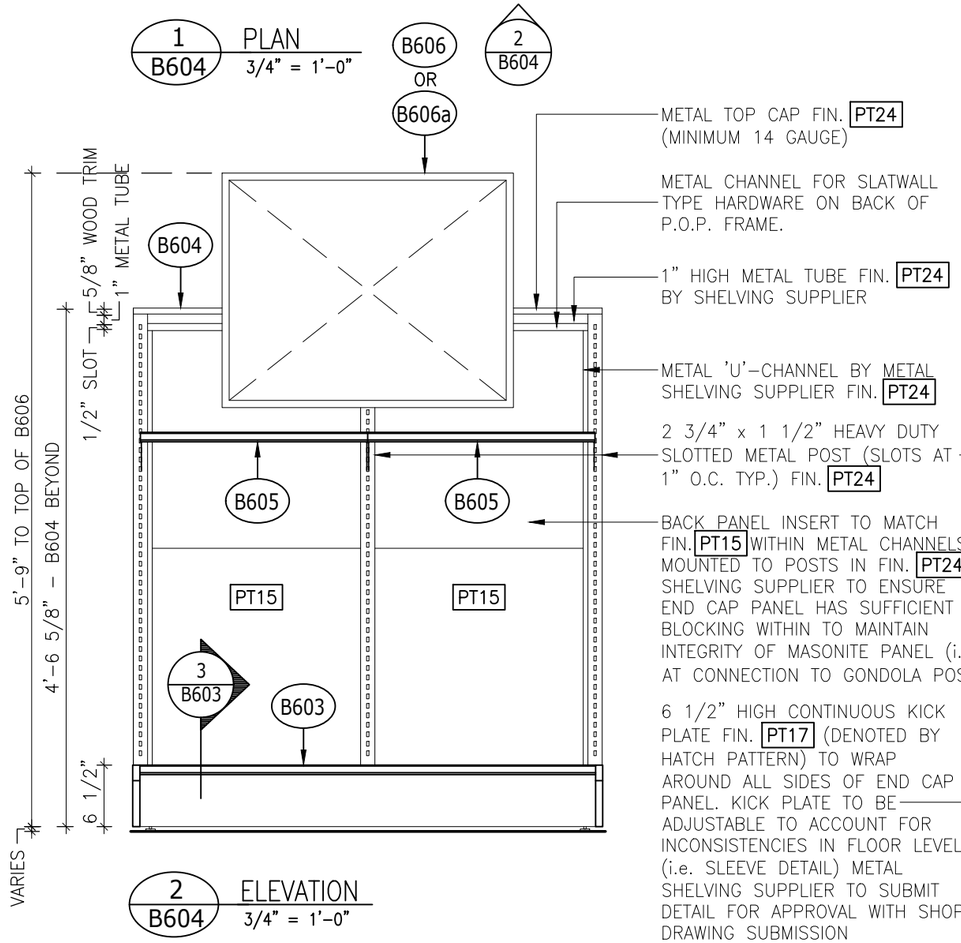

2 B604 ELEVATION
3/4" = 1'-0"

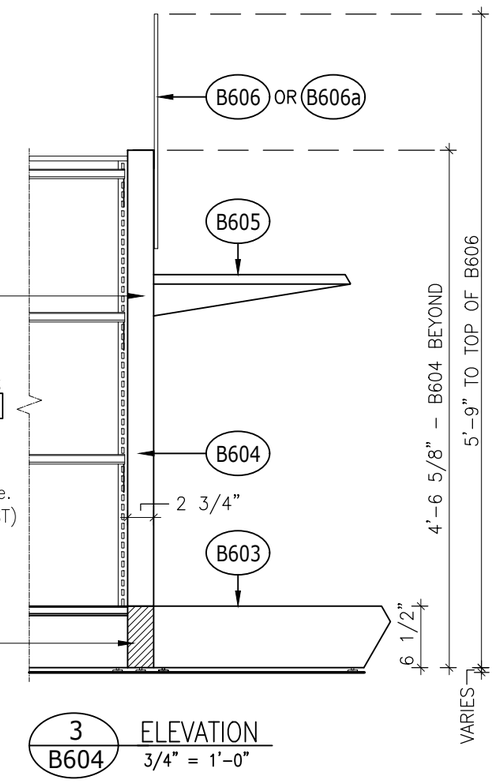

3 B604 ELEVATION
3/4" = 1'-0"

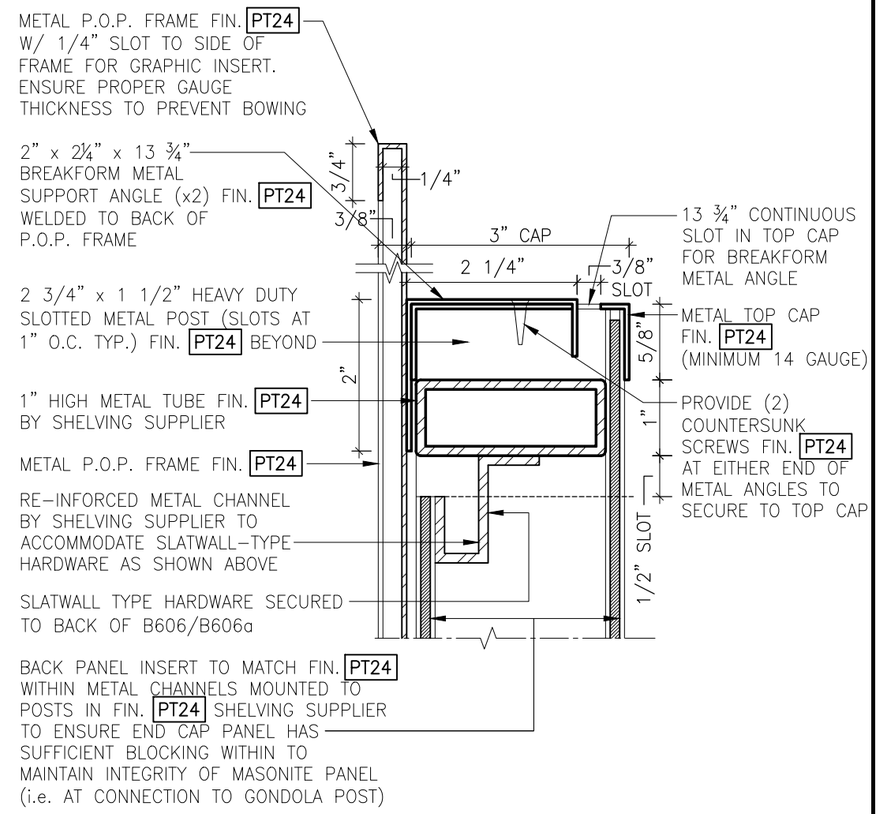

4 B604 DETAIL
6" = 1'-0"

LCBO	B600 WALK-IN COLDROOM	REVISION DATE	REV.	1 of 1	ISSUE DATE	STORE TYPE	STORE #
	WALK-IN COLDROOM END CAP PANEL	2019 NOV	01	B604	2019 NOV		312

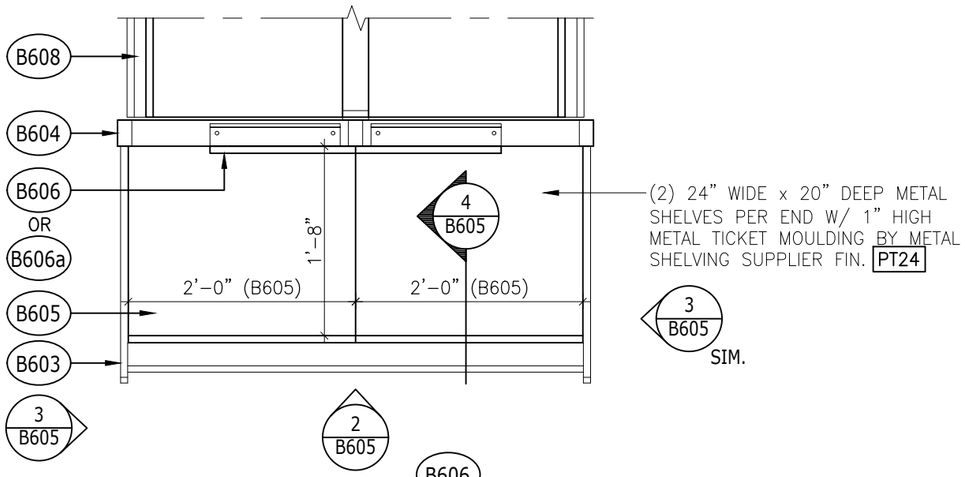

1 B605 PLAN
3/4" = 1'-0"

GENERAL NOTES

- DIMENSIONS SHOWN REFLECT SHELF & BASE DIMENSIONS ONLY & DO NOT TAKE METAL TICKET HOLDERS INTO ACCOUNT
- SHELVING SUPPLIER TO OBTAIN 1¾" PLASTIC TICKET HOLDER SAMPLE FROM LCBO PRIOR TO FABRICATION TO ENSURE PROPER FIT WITHIN TICKET MOULDING. SUBMIT SAMPLE FOR APPROVAL
- PERFORATIONS IN SHELVES ARE NOT ACCEPTABLE

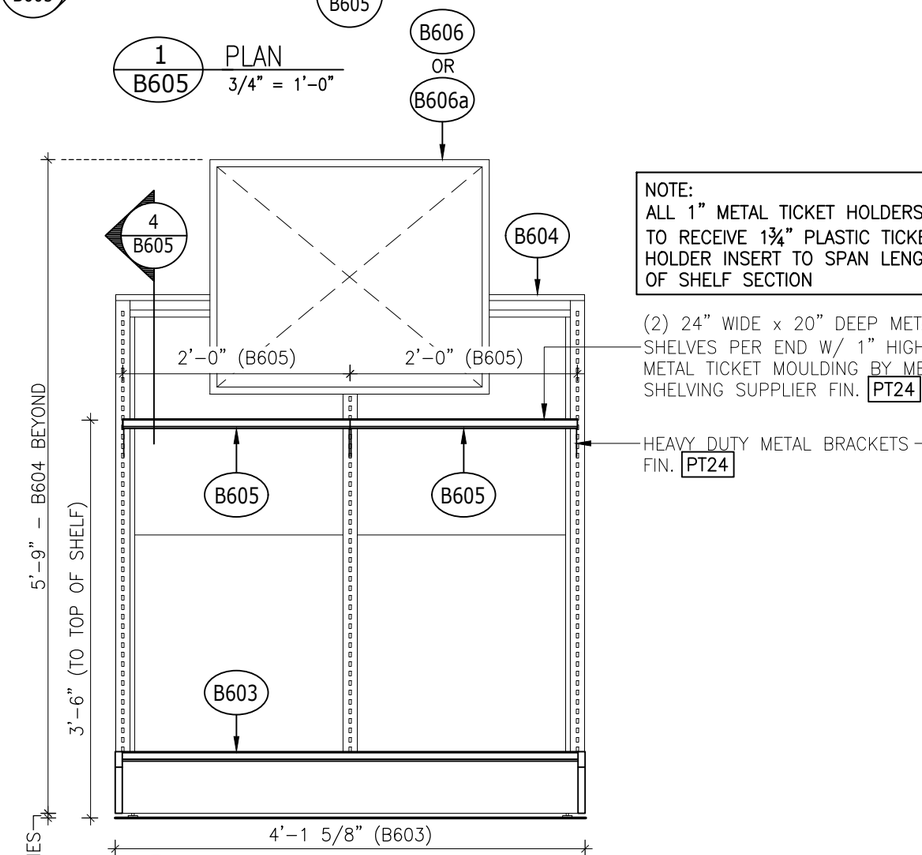

2 B605 ELEVATION
3/4" = 1'-0"

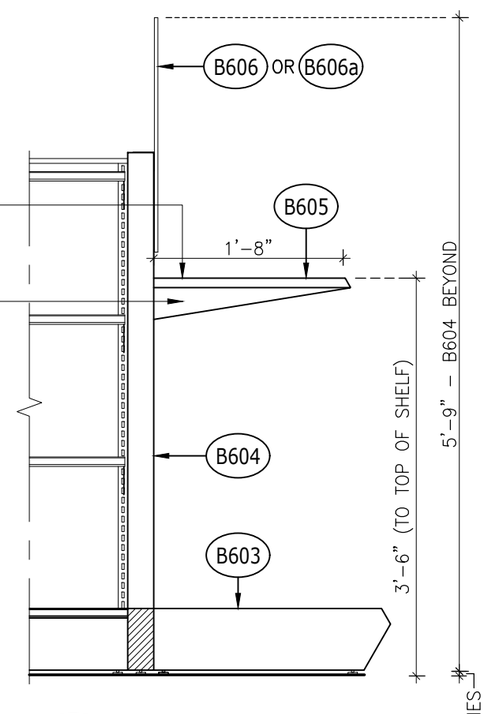

3 B605 ELEVATION
3/4" = 1'-0"

NOTE:
ALL 1" METAL TICKET HOLDERS TO RECEIVE 1¾" PLASTIC TICKET HOLDER INSERT TO SPAN LENGTH OF SHELF SECTION

HEAVY DUTY METAL SHELF C/W ANGLED METAL TICKET HOLDERS ON H.D. METAL BRACKETS ALL IN FIN. PT24

ANGLED METAL TICKET HOLDERS (20 GAUGE) TO ACCOMMODATE STANDARD LCBO 1" HIGH PAPER TICKETS AT ALL SHELVES FIN. PT24

NOTE:
NO VISIBILE HOLES IN FRONT OF TICKET HOLDER

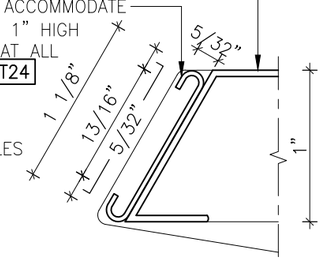

4 B605 ANGLED METAL TICKET HOLDER DETAIL
FULL SCALE

LCBO	B600 WALK-IN COLDROOM	REVISION DATE	REV.	1 of 1	ISSUE DATE	STORE TYPE	STORE #
	WALK-IN COLDROOM 24" END DISPLAY SHELVES	2019 NOV	01	B605	2019 NOV		312

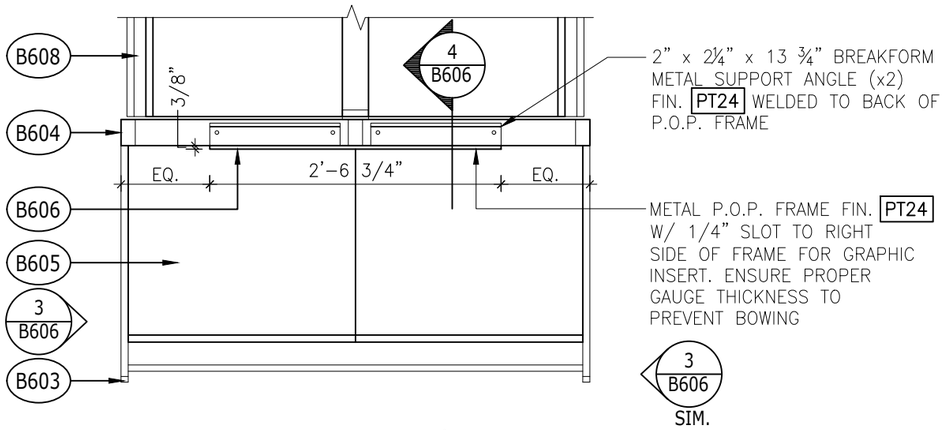

1 B606 PLAN
3/4" = 1'-0"

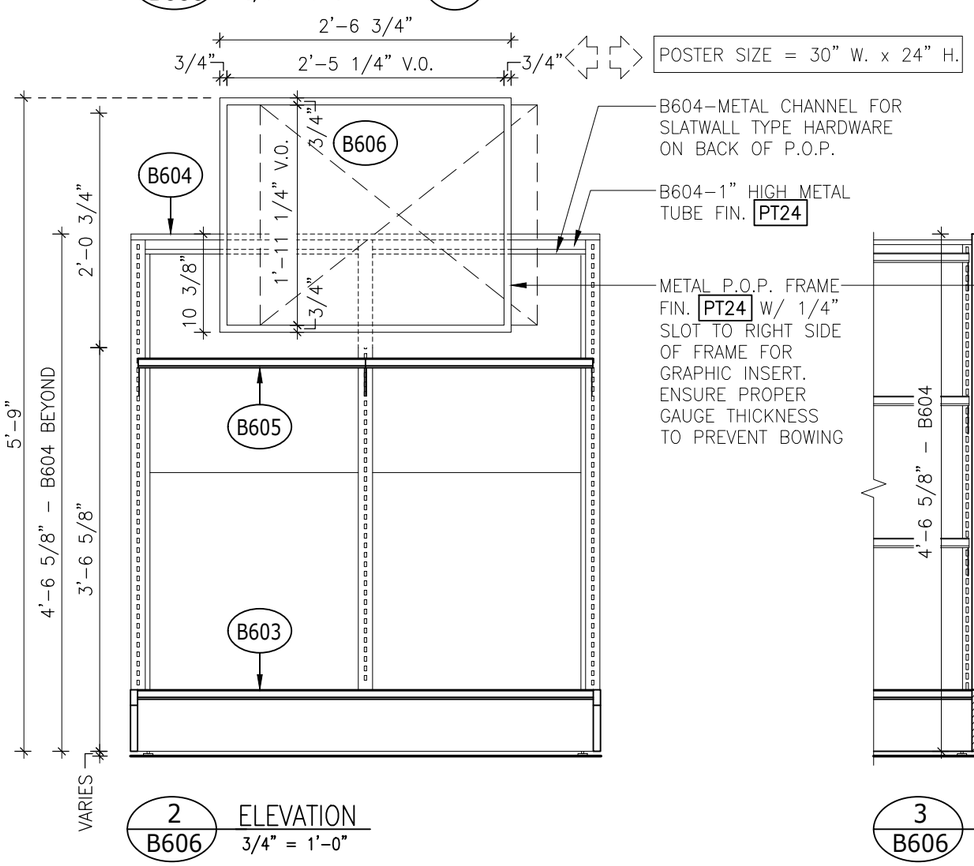

2 B606 ELEVATION
3/4" = 1'-0"

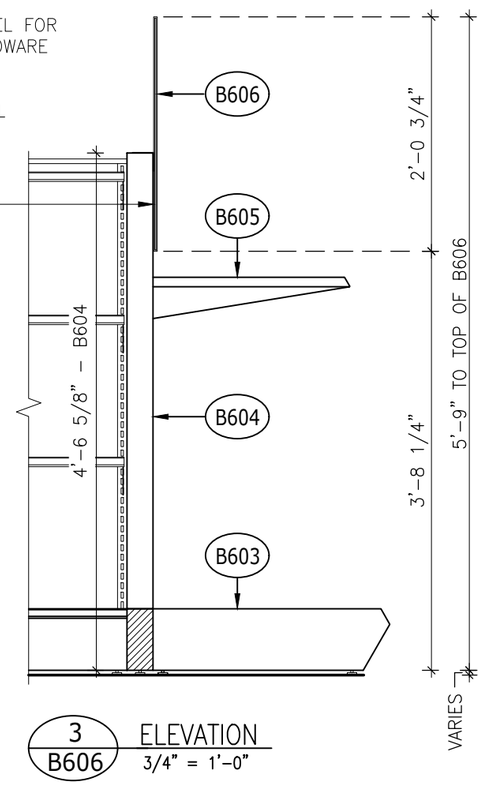

3 B606 ELEVATION
3/4" = 1'-0"

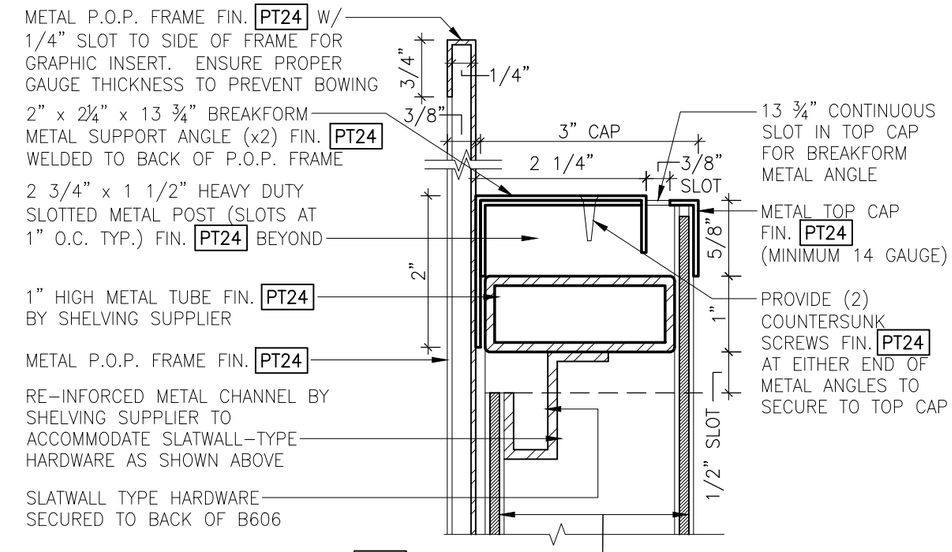

4 B606 DETAIL
6" = 1'-0"

ALL WELDED JOINTS TO BE GROUND SMOOTH TO ACHIEVE A SEAMLESS FINISH PRIOR TO RECEIVING FIN. PT24 TO ALL EXPOSED SURFACES

MANUFACTURER TO ENSURE FRAME CAN ACCOMMODATE 30"W. X 24"H. POSTER PRIOR TO FABRICATION

2" x 2¼" x 13 ¾" BREAKFORM METAL SUPPORT ANGLE (x2) FIN. PT24 WELDED TO BACK OF P.O.P. FRAME

PROVIDE 1/4" SLOT TO RIGHT SIDE OF FRAME ONLY TO INSERT/REMOVE POSTER (SIZE = 30"W. x 24"H.)

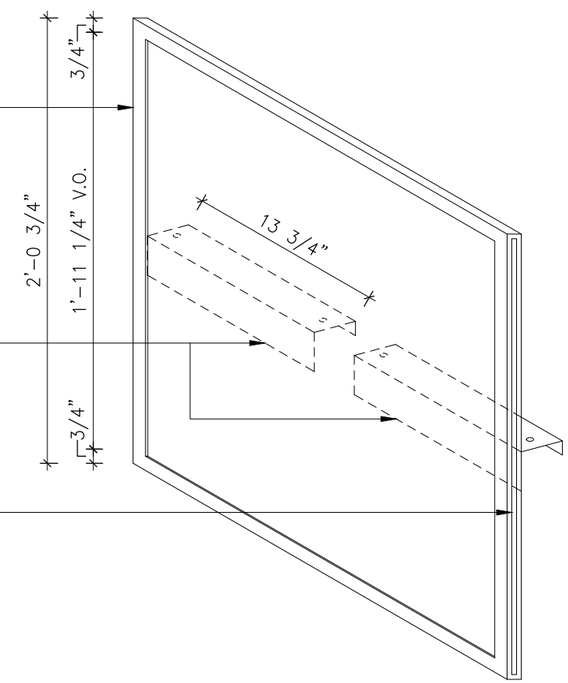

5 B606 ISOMETRIC
N.T.S.

LCBO	B600 WALK-IN COLDROOM	REVISION DATE	REV.	1 of 1	ISSUE DATE	STORE TYPE	STORE #
	WALK-IN COLDROOM GONDOLA REMOVABLE P.O.P. FRAME	2019 NOV	01	B606	2019 NOV		312

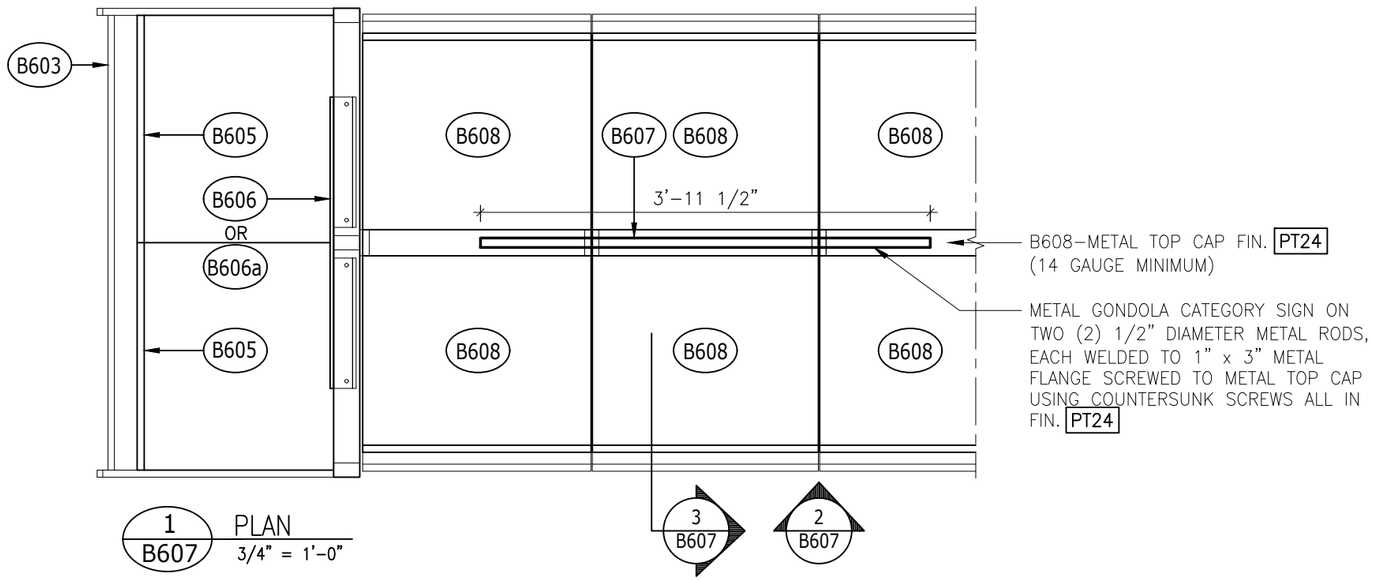

1 B607 PLAN
3/4" = 1'-0"

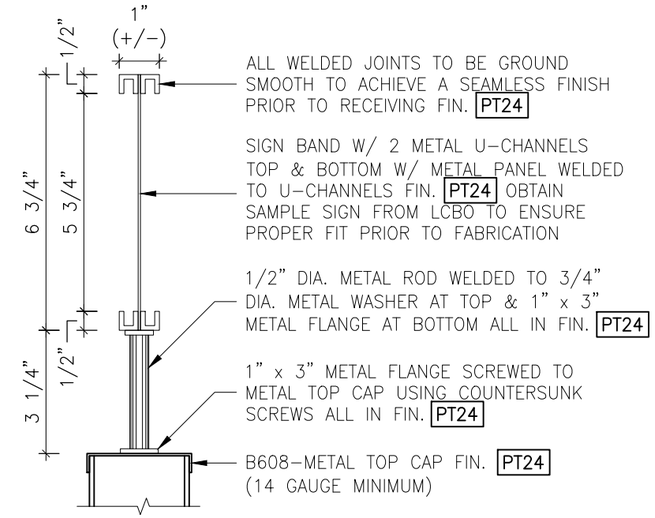

4 B607 SECTION
3" = 1'-0"

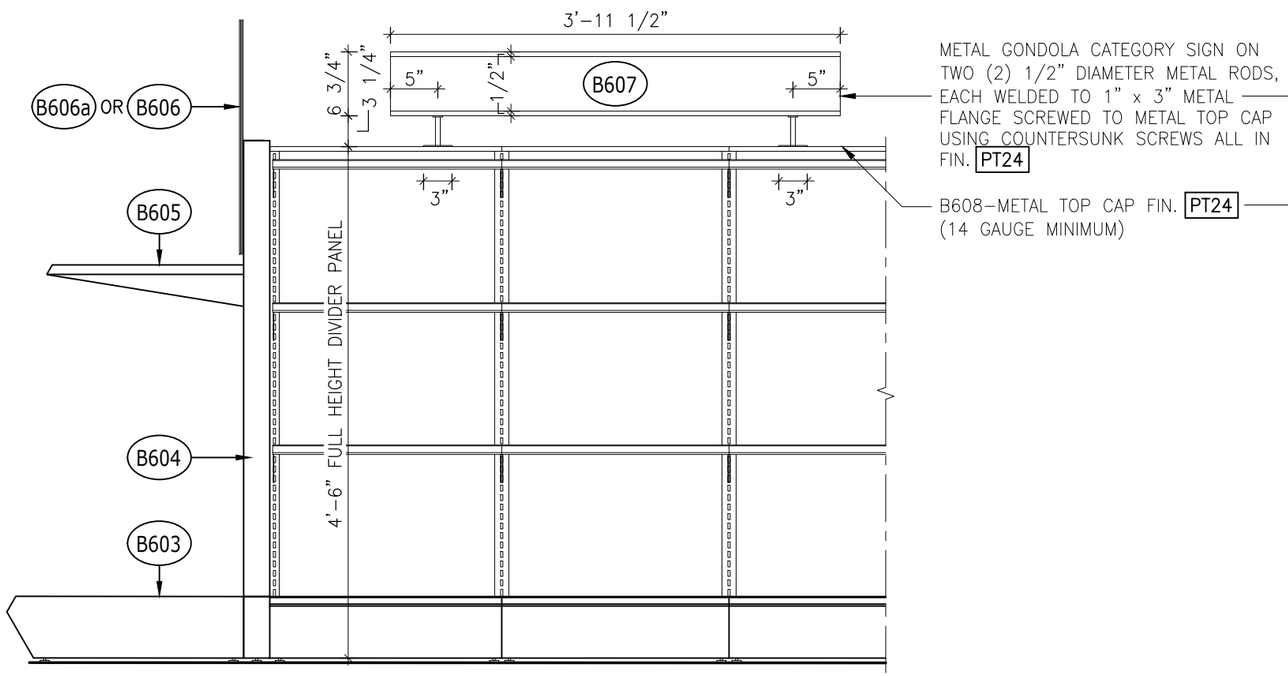

2 B607 ELEVATION
3/4" = 1'-0"

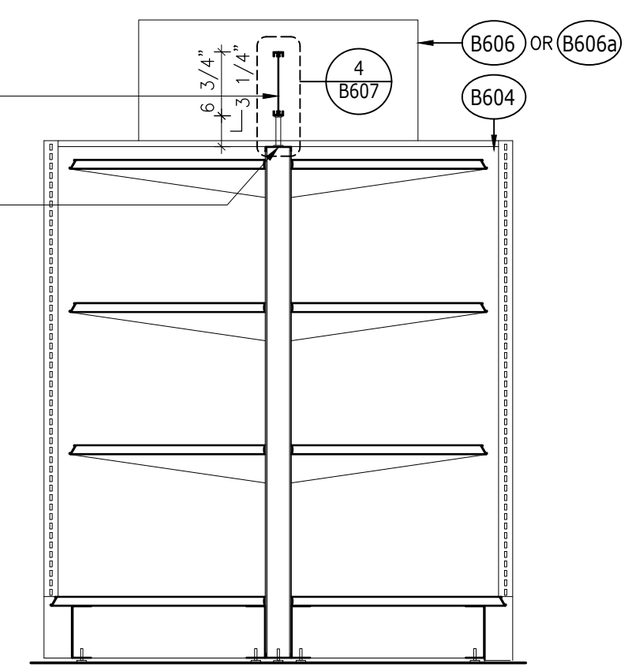

3 B607 SECTION
3/4" = 1'-0"

LCBO	B600 WALK-IN COLDROOM	REVISION DATE	REV.	1 of 1	ISSUE DATE	STORE TYPE	STORE #
	WALK-IN COLDROOM GONDOLA CATEGORY SIGN	2019 NOV	01	B607	2019 NOV		312

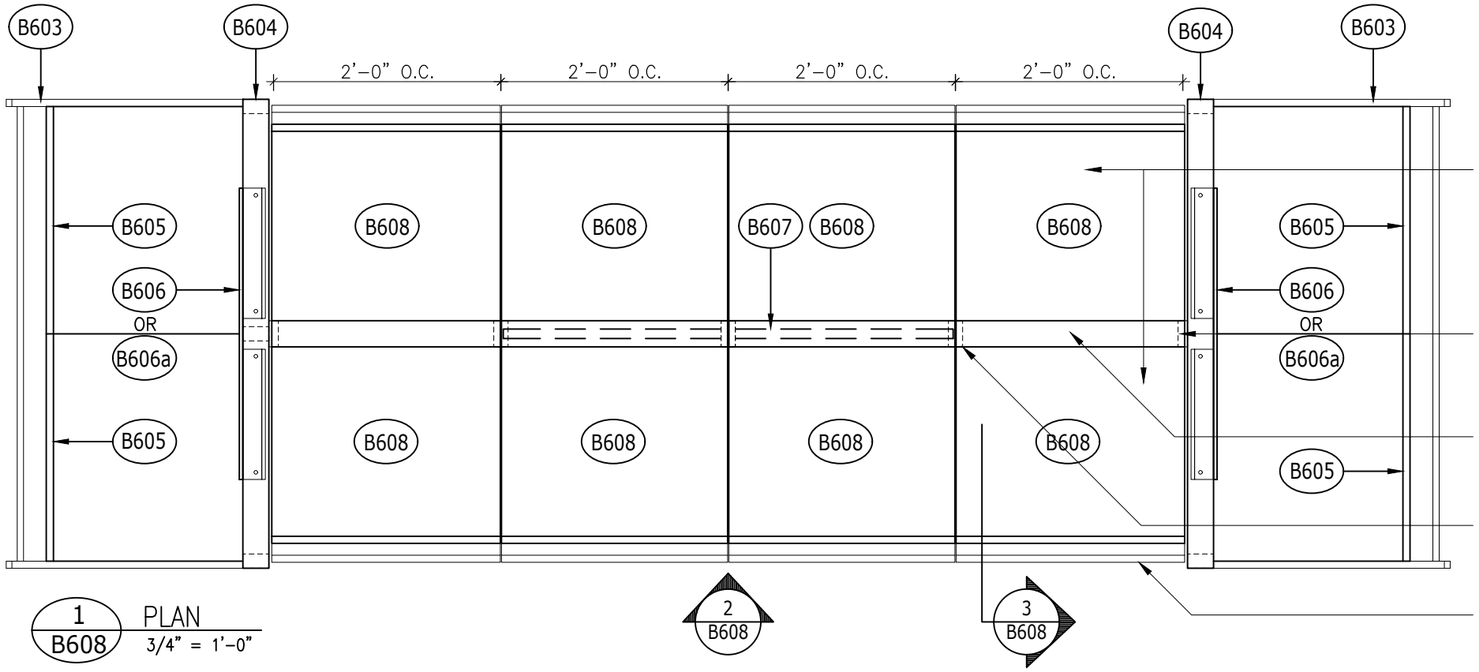

1 B608 PLAN
3/4" = 1'-0"

HEAVY DUTY METAL SHELVING C/W ANGLED METAL TICKET HOLDERS TO ACCOMODATE STANDARD LCBO 1" HIGH PAPER TICKETS AT ALL SHELVES (SEE DETAIL 4, B608) ON H.D. METAL BRACKETS ALL IN FIN. PT24

ALL END POSTS TO BE MODIFIED AS REQUIRED TO ENSURE THAT THERE ARE NO GAPS BETWEEN METAL SHELVES AND END GABLES (FILLER STRIPS ARE NOT ACCEPTABLE)

METAL TOP CAP FIN. PT24 (14 GAUGE MINIMUM)

2 3/4" x 1 1/2" x 52 5/8" HIGH HEAVY DUTY SLOTTED METAL POST (SLOTS AT 1" O.C. TYP.) FIN. PT24

ANGLED METAL TICKET HOLDER BY SHELVING CONTRACTOR TO ACCOMODATE STANDARD LCBO 1" PAPER TICKETS AT BASE (SEE DETAIL 4, B608)

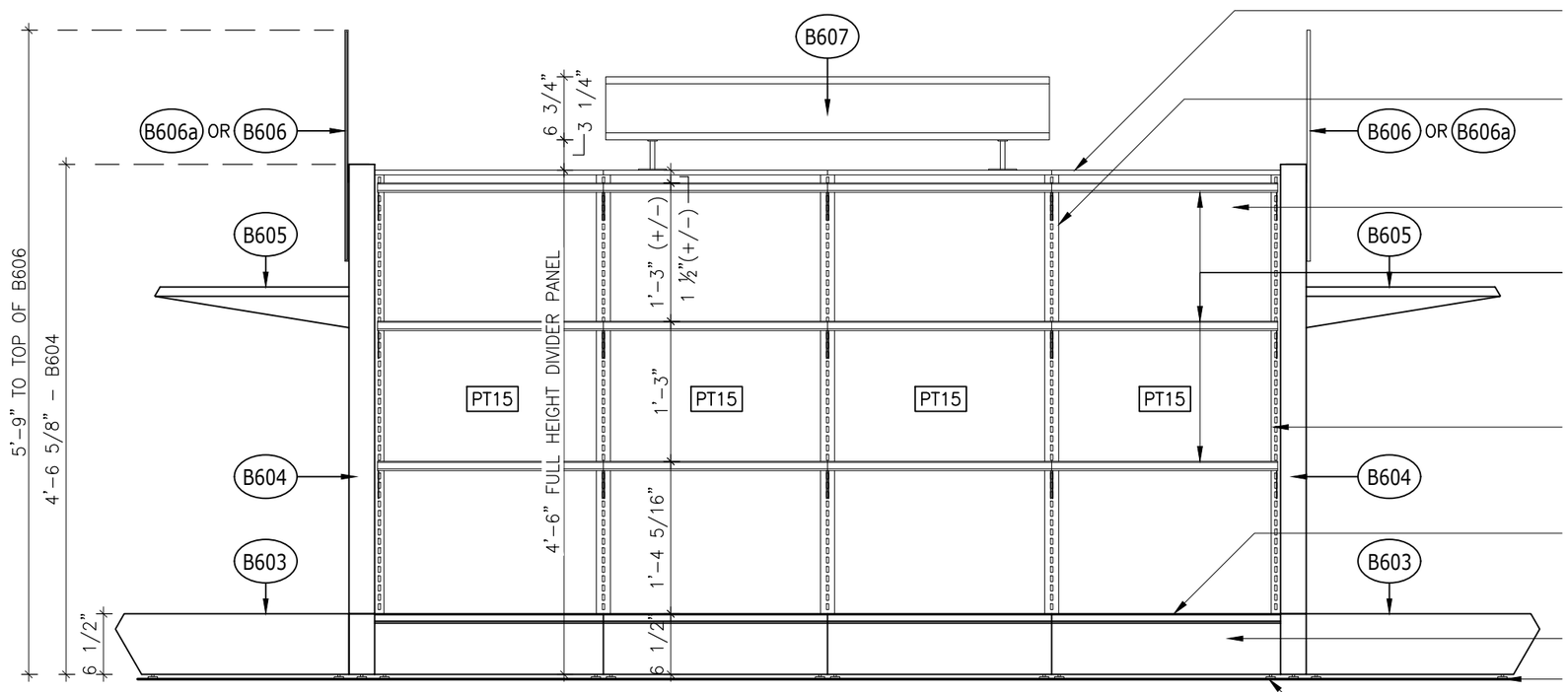

METAL TOP CAP FIN. PT24 (14 GAUGE MIN.)

2 3/4" x 1 1/2" x 54" HIGH HEAVY DUTY SLOTTED METAL POST (SLOTS AT 1" O.C. TYP.) COMPLETE WITH 2 3/4" FULL HEIGHT METAL DIVIDER PANEL BETWEEN POSTS ALL IN FIN. PT24

FULL HEIGHT DIVIDER PANEL BETWEEN POSTS IN FIN. PT15

HEAVY DUTY METAL SHELVING C/W ANGLED METAL TICKET HOLDERS TO ACCOMMODATE STANDARD LCBO 1" HIGH PAPER TICKETS AT ALL SHELVES (SEE DETAIL 4, B608) ON H.D. METAL BRACKETS ALL IN FIN. PT24

ALL END POSTS TO BE MODIFIED AS REQ'D. TO ENSURE THAT THERE ARE NO GAPS BETWEEN METAL SHELVES AND END GABLES (FILLER STRIPS ARE NOT ACCEPTABLE)

ANGLED METAL TICKET HOLDER BY SHELVING CONTRACTOR TO ACCOMMODATE STANDARD LCBO 1" PAPER TICKETS AT BASE (SEE DETAIL 4, B608)

RECESSED METAL BASE FIN. PT17

FINISHED FLOOR LEVEL

HEAVY DUTY LEVELLERS

2 B608 ELEVATION
3/4" = 1'-0"

NOTE:
ALL 1" METAL TICKET HOLDERS TO RECEIVE 1¾" PLASTIC TICKET HOLDER INSERT TO SPAN LENGTH OF SHELF SECTION

LCBO	B600 WALK-IN COLDROOM	REVISION DATE	REV.	1 of 2	ISSUE DATE	STORE TYPE	STORE #
	2'-0" CONVERTIBLE GONDOLA (4 SHELVES) C/W METAL TICKET MOULDINGS	2019 NOV	01	B608	2019 NOV		312

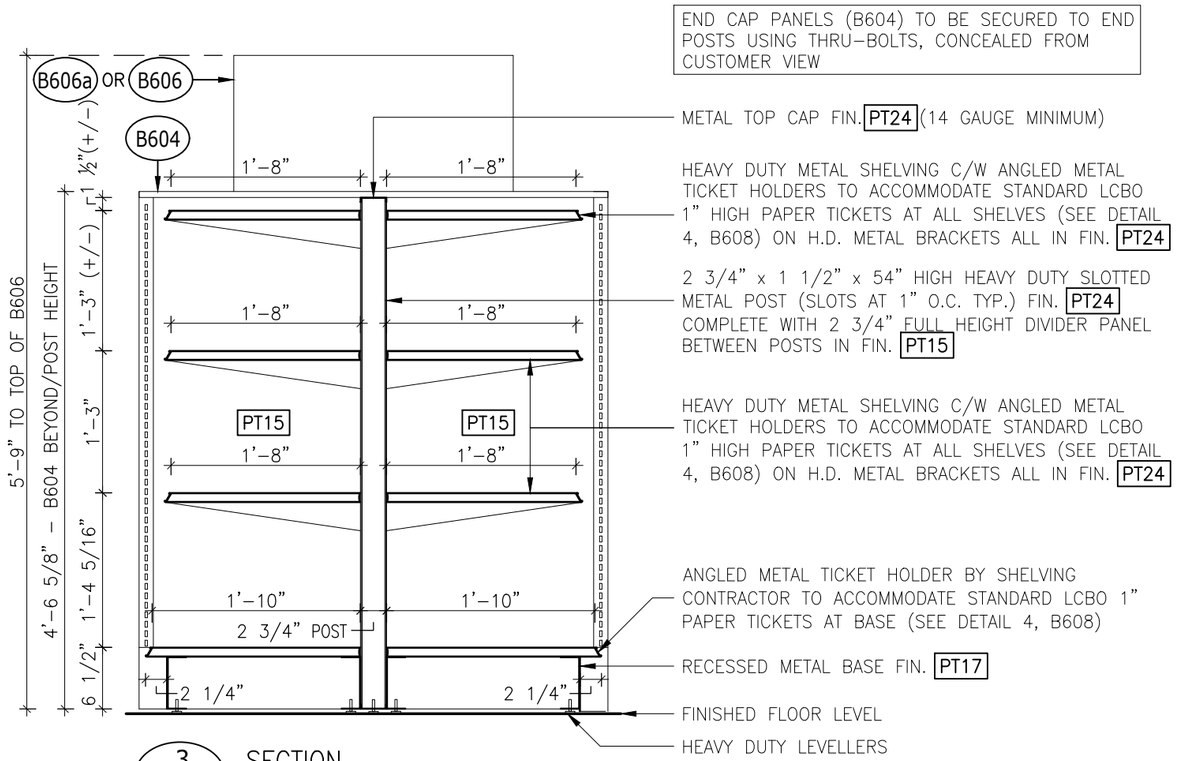

3 / B608 SECTION
3/4" = 1'-0"

NOTE:
ALL 1" METAL TICKET HOLDERS TO RECEIVE 1¾" PLASTIC TICKET HOLDER INSERT TO SPAN LENGTH OF SHELF SECTION

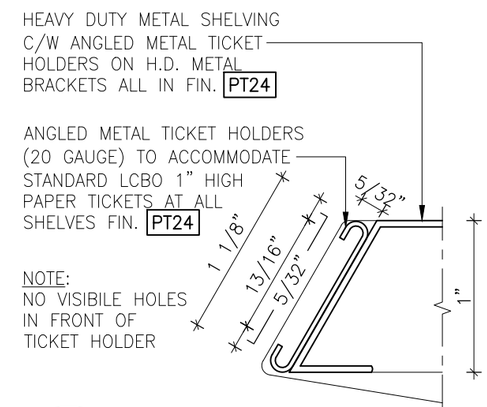

4 / B608 ANGLED METAL TICKET HOLDER DETAIL
FULL SCALE

GENERAL NOTES

- DIMENSIONS SHOWN REFLECT SHELF & BASE DIMENSIONS ONLY & DO NOT TAKE METAL TICKET HOLDERS INTO ACCOUNT
- ALL ADJUSTMENTS TO COMPENSATE FOR NON-LEVEL FLOOR SURFACES TO BE MADE AT BOTTOM END OF POST
- GC TO CO-ORDINATE MILLWORK + METAL SHELF INSTALLATION
- END CAP PANELS (B604) TO BE SECURED TO END POSTS USING THRU-BOLTS, CONCEALED FROM CUSTOMER VIEW
- SHELVING SUPPLIER TO OBTAIN 1" HIGH PAPER TICKET SAMPLE FROM LCBO PRIOR TO FABRICATION TO ENSURE PROPER FIT WITHIN TICKET MOULDING. SUBMIT SAMPLE FOR APPROVAL
- GC TO ENSURE ALL SHELVES ARE IN EXACT ALIGNMENT AND ARE TRUE & LEVEL. PERFORATED SHELVES ARE ACCEPTABLE.
- ALL END POSTS TO BE MODIFIED AS REQUIRED TO ENSURE THAT THERE ARE NO GAPS BETWEEN METAL SHELVES AND END GABLES (FILLER STRIPS ARE NOT ACCEPTABLE)
- INSERT PANEL OF FULL HEIGHT BACK PANEL TO BE METAL OR ANTIBACTERIAL/WATER-RESISTANT MASONITE (FIBREX OR APPROVED EQUAL) TO MATCH FIN. PT15

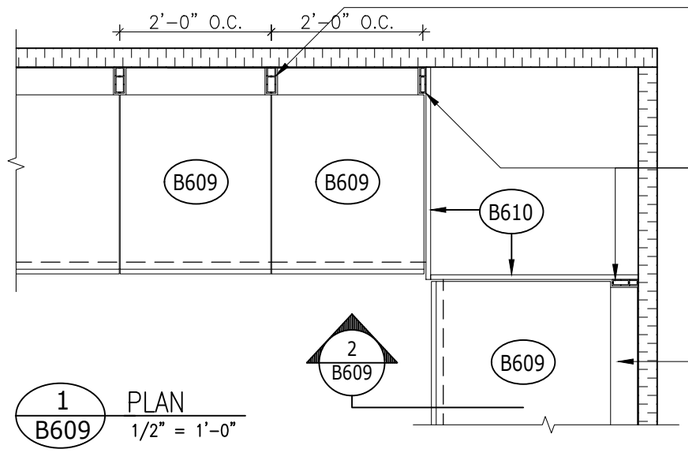

1 B609 PLAN
1/2" = 1'-0"

4 1/8" x 1 1/2" x 7'-0" HIGH HEAVY DUTY SLOTTED METAL POST (SLOTS AT 1" O.C. TYP.) FIN. PT24

ALL END POSTS TO BE MODIFIED AS REQUIRED TO ENSURE THAT THERE ARE NO GAPS BETWEEN METAL SHELVES AND END GABLES (FILLER STRIPS ARE NOT ACCEPTABLE) FIN. PT24

FRICTION-FIT METAL FILLER STRIP FIN. PT24 BETWEEN POSTS (APPROXIMATELY 4" DP.)

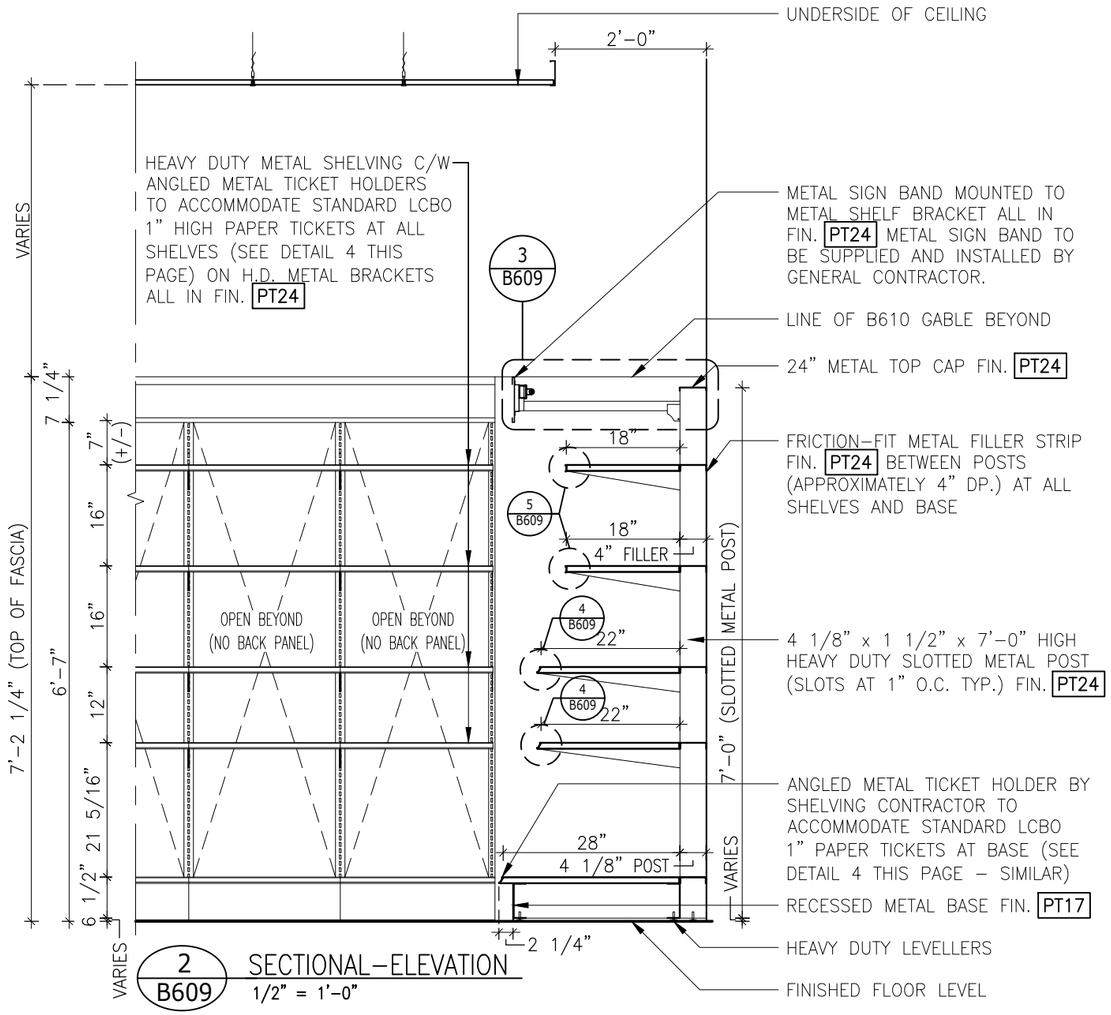

2 B609 SECTIONAL-ELEVATION
1/2" = 1'-0"

NOTE:
GC TO ENSURE THAT METAL SIGN BAND IS TRUE AND LEVEL AND CONSTRUCTED IN MINIMUM 8'-0" LENGTHS EXCEPT AT END RUNS AS REQUIRED

NOTE:
ALL 1" METAL TICKET HOLDERS TO RECEIVE 1¾" PLASTIC TICKET HOLDER INSERT TO SPAN LENGTH OF SHELF SECTION

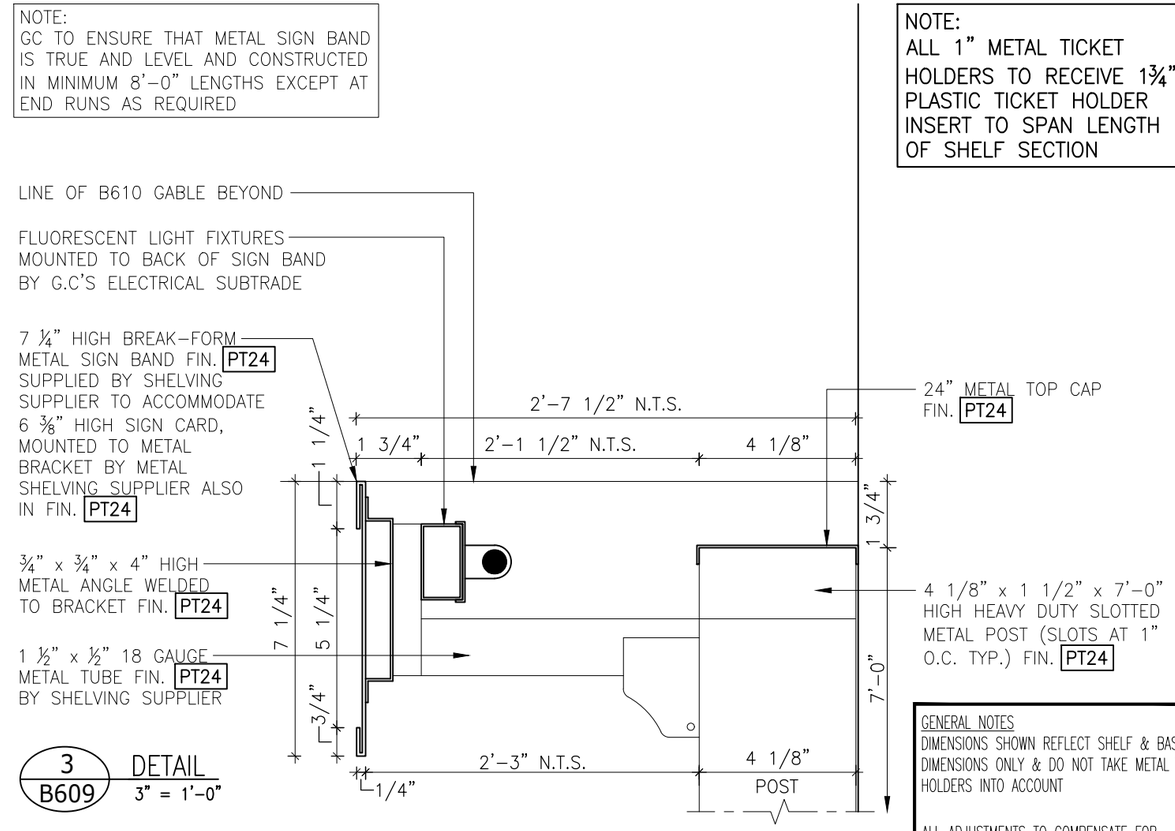

3 B609 DETAIL
3" = 1'-0"

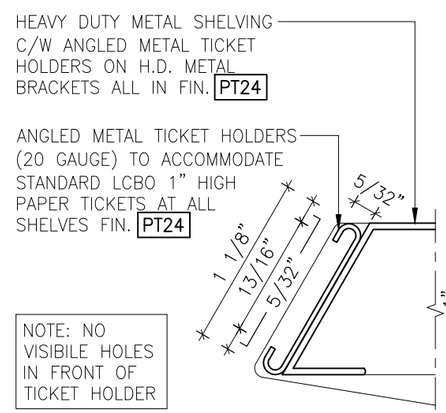

4 B609 ANGLED METAL TICKET HOLDER DETAIL
FULL SCALE

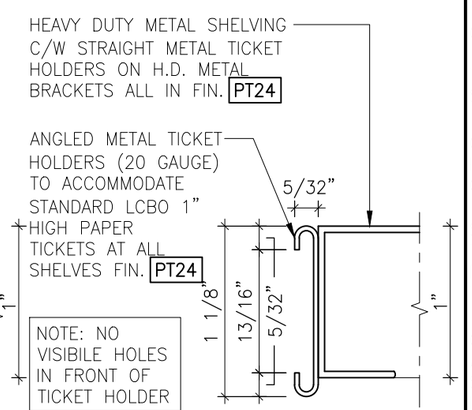

5 B609 STRAIGHT METAL TICKET HOLDER DETAIL
FULL SCALE

GENERAL NOTES

DIMENSIONS SHOWN REFLECT SHELF & BASE DIMENSIONS ONLY & DO NOT TAKE METAL TICKET HOLDERS INTO ACCOUNT

ALL ADJUSTMENTS TO COMPENSATE FOR NON-LEVEL FLOOR SURFACES TO BE MADE AT BOTTOM END OF POST

GC TO CO-ORDINATE INSTALLATION

T5 FLUORESCENT LIGHT FIXTURES TO BE SUPPLIED & INSTALLED BY G.C.

GC TO OBTAIN SIGNAGE SAMPLE FROM LCBO PRIOR TO FABRICATION TO ENSURE PROPER FIT OF SIGNAGE INSERT

SHELVING SUPPLIER TO OBTAIN 1" HIGH PAPER TICKET SAMPLE FROM LCBO PRIOR TO FABRICATION TO ENSURE PROPER FIT WITHIN TICKET MOULDING. SUBMIT SAMPLE FOR APPROVAL

GC TO ENSURE ALL SHELVES ARE IN EXACT ALIGNMENT AND ARE TRUE & LEVEL. PERFORATED SHELVES ARE ACCEPTABLE. SHELVES TO SUPPORT LOAD CAPACITY OF 500LBS

ALL END POSTS TO BE MODIFIED AS REQUIRED TO ENSURE THAT THERE ARE NO GAPS BETWEEN METAL SHELVES AND END GABLES (FILLER STRIPS ARE NOT ACCEPTABLE)

LCBO	B600 WALK-IN COLDROOM	REVISION DATE	REV.	1 of 1	ISSUE DATE	STORE TYPE	STORE #
	2'-0" WALK-IN COLDROOM PERIMETER METAL SHELVING UNIT	2019 NOV	01	B609	2019 NOV		312

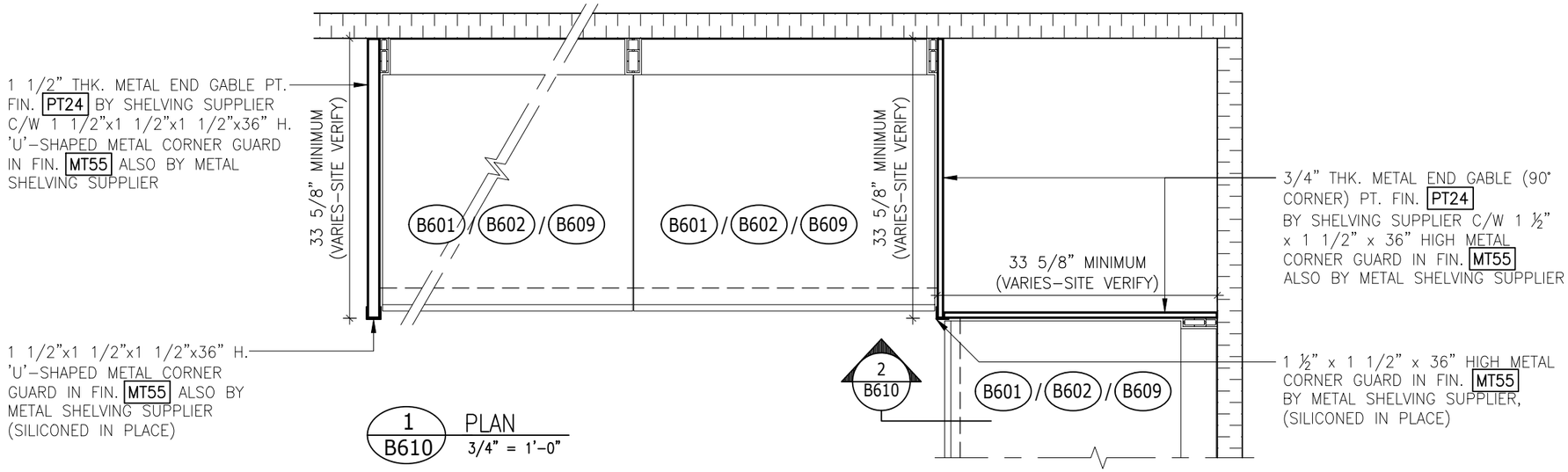

1 / B610 PLAN
3/4" = 1'-0"

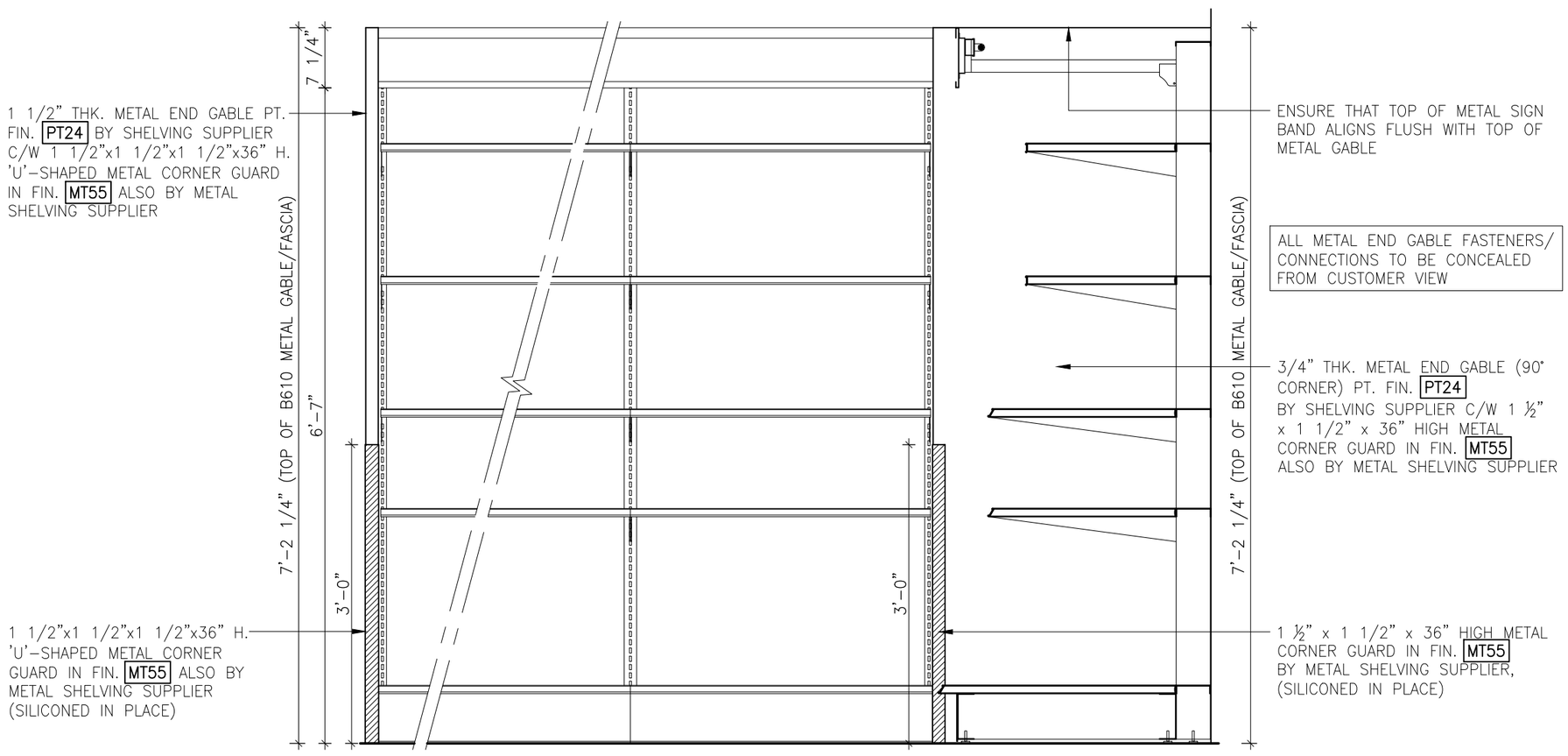

2 / B610 SECTIONAL-ELEVATION
3/4" = 1'-0"

LCBO	B600 WALK-IN COLDROOM	REVISION DATE	REV.	1 of 1	ISSUE DATE	STORE TYPE	STORE #
	WALK-IN COLDROOM PERIMETER WALL FIXTURE END GABLE	2019 NOV	01	B610	2019 NOV		312

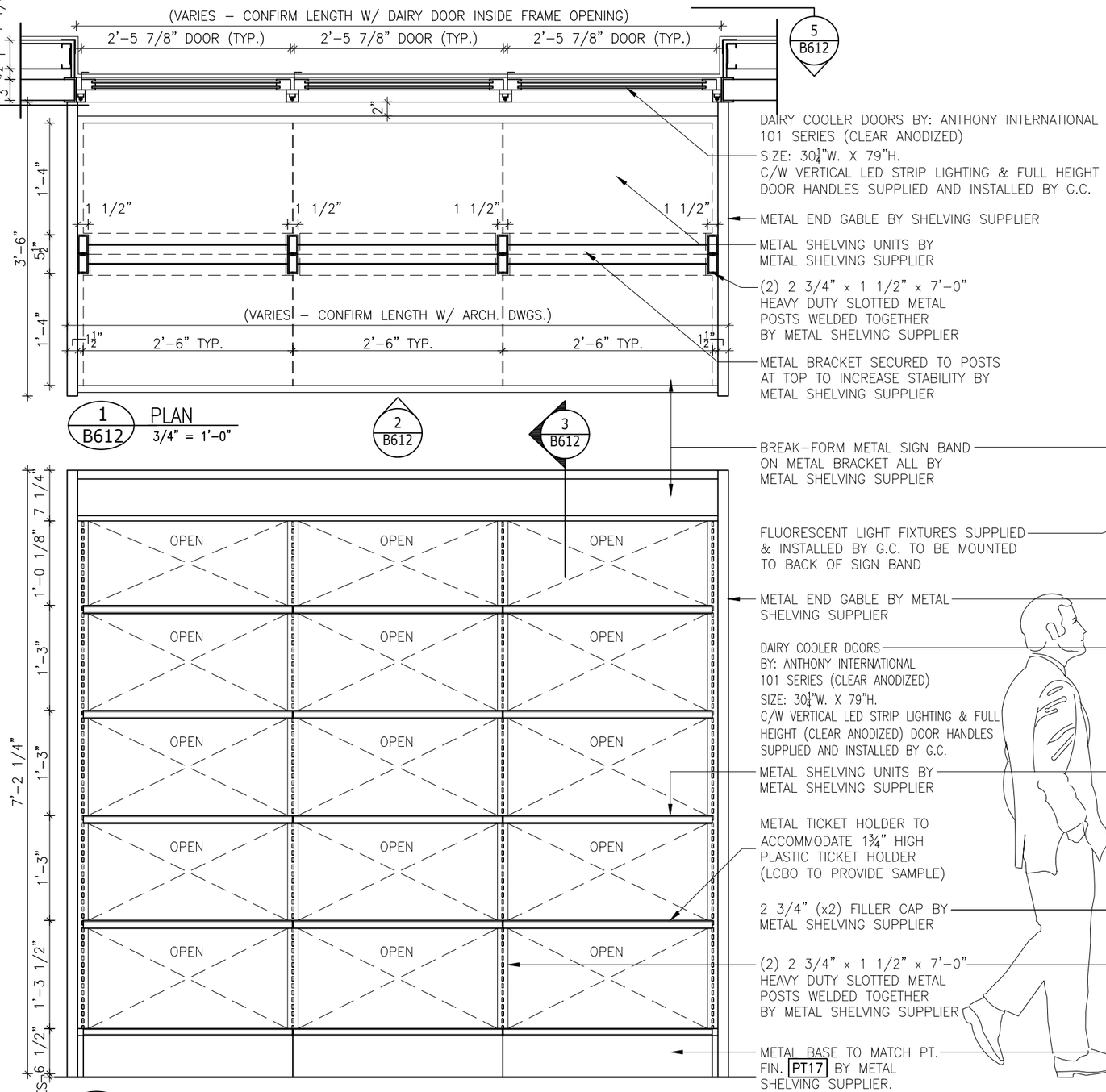

NOTE:
ADDITIONAL CENTER MULLION REQUIRED BETWEEN EVERY 5 COOLER DOOR MODULES.

NOTE:
ALL METAL SHELVING COMPONENTS TO BE PREFINISHED BY METAL SHELVING SUPPLIER TO MATCH FIN. PT24 UNLESS NOTED OTHERWISE

NOTE:
G.C. TO COORDINATE ALL COOLER DOOR DETAILS W/ SUPPLIER

NOTE:
METAL SIGN BAND TO BE CONSTRUCTED IN 7'-6" MODULES TO ALIGN WITH SHELVING UNITS BELOW.

NOTE:
ALL 1" METAL TICKET HOLDERS TO RECEIVE 1¾" PLASTIC TICKET HOLDER INSERT TO SPAN LENGTH OF SHELF SECTION

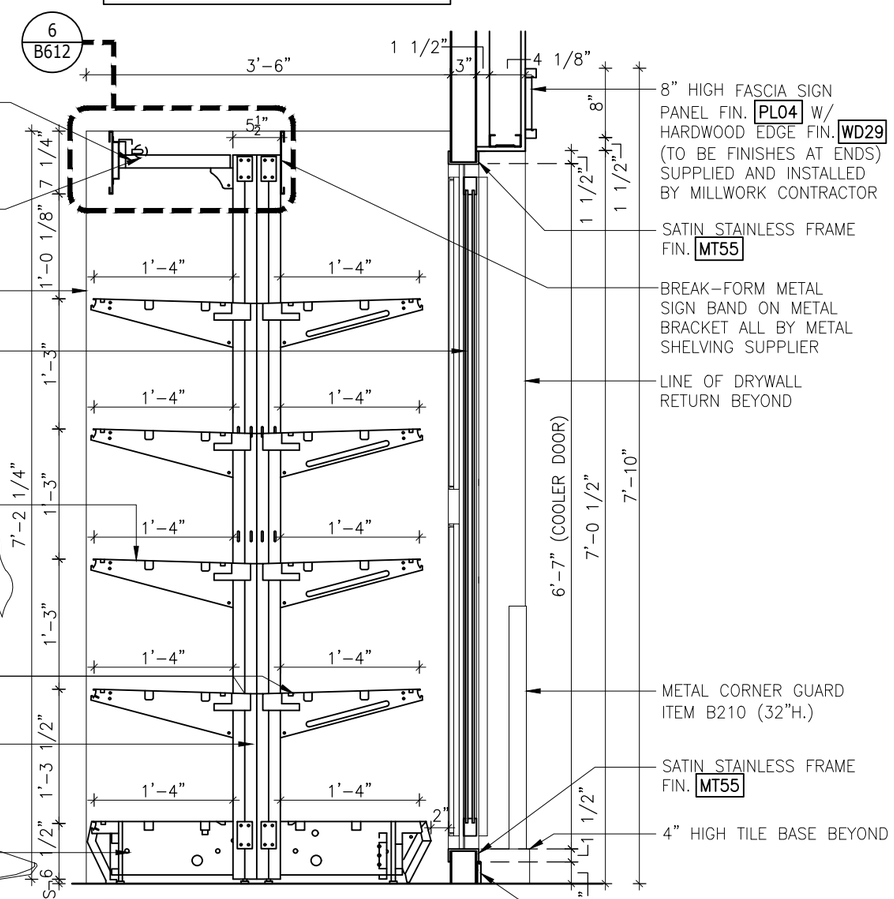

LCBO	B600 WALK-IN COLDROOM	REVISION DATE	REV.	1 of 2	ISSUE DATE	STORE TYPE	STORE #
	WALK-IN COLDROOM DOUBLE-SIDED COOLER SHELVING	2019 NOV	01	B612	2019 NOV		312

NOTE: METAL SHELVING SPEC. WIDTHS TO ALIGN W/ DAIRY DOOR SPEC. WIDTHS

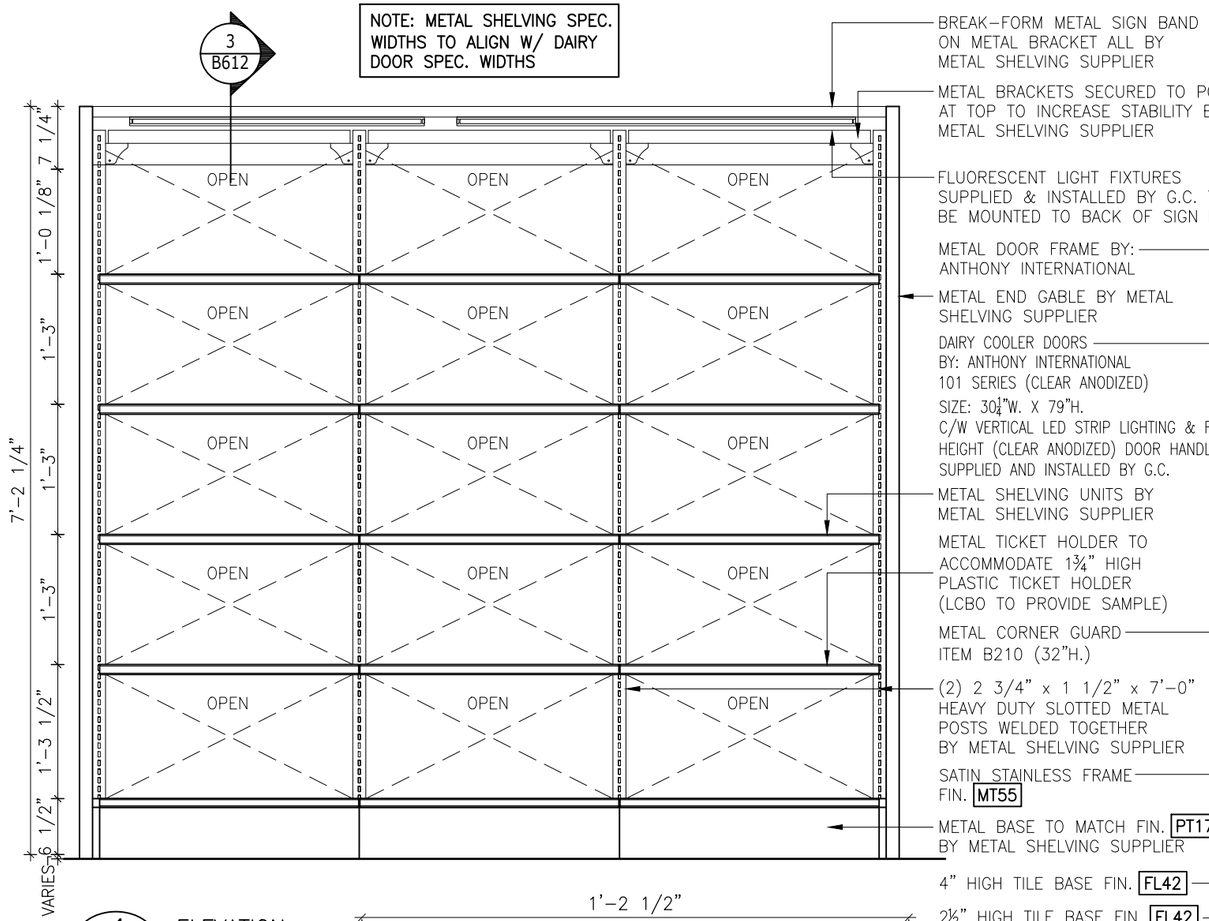

4 B612 ELEVATION
3/4" = 1'-0"

8" HIGH FASCIA SIGN PANEL FIN. PL04 W/ HARDWOOD EDGE FIN. WD29 (TO BE FINISHES AT ENDS) SUPPLIED AND INSTALLED BY MILLWORK CONTRACTOR

BREAK-FORM METAL SIGN BAND ON METAL BRACKET ALL BY METAL SHELVING SUPPLIER

METAL BRACKETS SECURED TO POSTS AT TOP TO INCREASE STABILITY BY METAL SHELVING SUPPLIER

FLUORESCENT LIGHT FIXTURES SUPPLIED & INSTALLED BY G.C. TO BE MOUNTED TO BACK OF SIGN BAND

METAL DOOR FRAME BY: ANTHONY INTERNATIONAL

METAL END GABLE BY METAL SHELVING SUPPLIER

DAIRY COOLER DOORS BY: ANTHONY INTERNATIONAL 101 SERIES (CLEAR ANODIZED) SIZE: 30¼"W. X 79"H. C/W VERTICAL LED STRIP LIGHTING & FULL HEIGHT (CLEAR ANODIZED) DOOR HANDLES SUPPLIED AND INSTALLED BY G.C.

METAL SHELVING UNITS BY METAL SHELVING SUPPLIER

METAL TICKET HOLDER TO ACCOMMODATE 1¾" HIGH PLASTIC TICKET HOLDER (LCBO TO PROVIDE SAMPLE)

METAL CORNER GUARD ITEM B210 (32"H.)

(2) 2 3/4" x 1 1/2" x 7'-0" HEAVY DUTY SLOTTED METAL POSTS WELDED TOGETHER BY METAL SHELVING SUPPLIER

SATIN STAINLESS FRAME FIN. MT55

METAL BASE TO MATCH FIN. PT17 BY METAL SHELVING SUPPLIER

4" HIGH TILE BASE FIN. FL42

2½" HIGH TILE BASE FIN. FL42

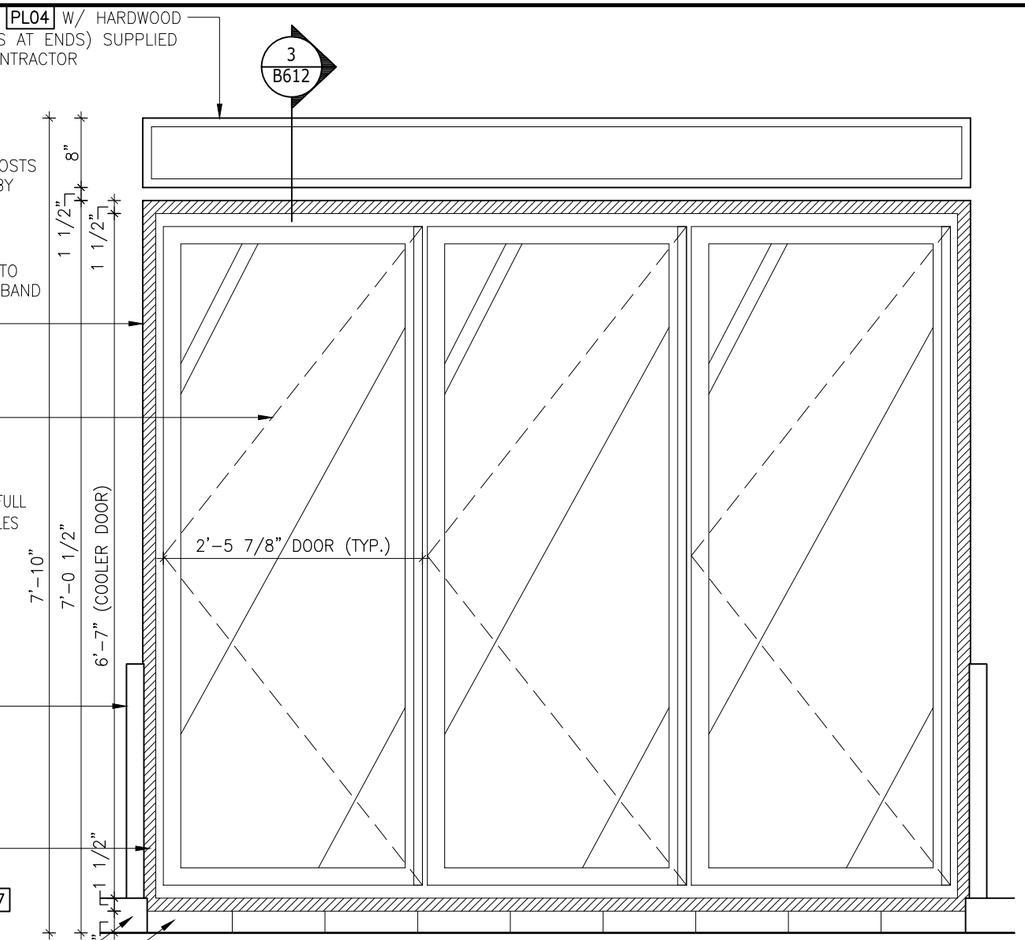

5 B612 ELEVATION
3/4" = 1'-0"

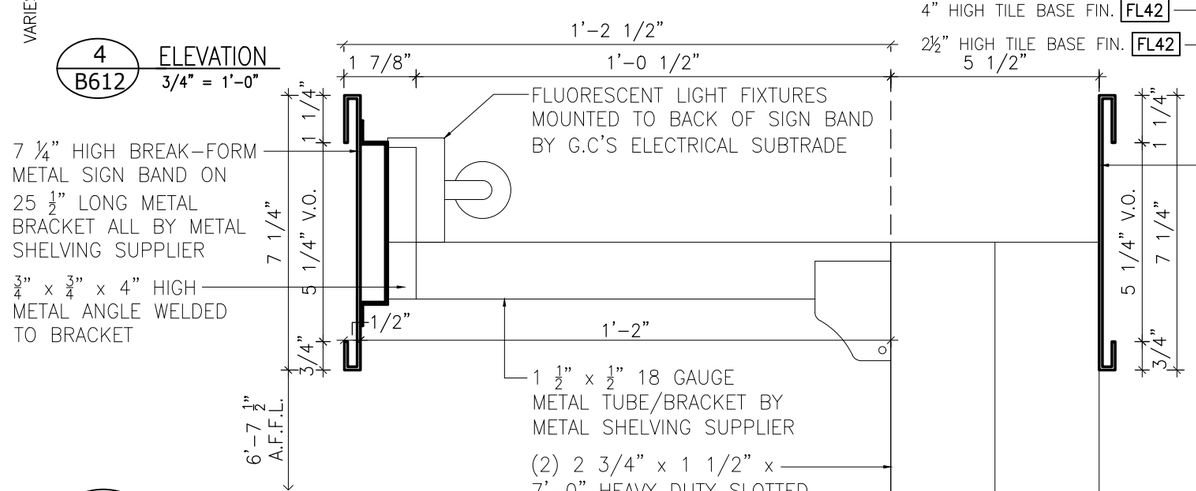

6 B612 SIGNBAND DETAIL
3" = 1'-0"

NOTE:
ALL 1" METAL TICKET HOLDERS TO RECEIVE 1¾" PLASTIC TICKET HOLDER INSERT TO SPAN LENGTH OF SHELF SECTION

NOTE:
ADDITIONAL CENTER MULLION REQUIRED BETWEEN EVERY 5 COOLER DOOR MODULES.

NOTE:
ALL METAL SHELVING COMPONENTS TO BE PREFINISHED BY METAL SHELVING SUPPLIER TO MATCH FIN. PT24 UNLESS NOTED OTHERWISE

NOTE:
G.C. TO COORDINATE ALL COOLER DOOR DETAILS W/ SUPPLIER

NOTE:
METAL SIGN BAND TO BE CONSTRUCTED IN 7'-6" MODULES TO ALIGN WITH SHELVING UNITS BELOW.

LCBO	B600 WALK-IN COLDROOM	REVISION DATE	REV.	2 of 2	ISSUE DATE	STORE TYPE	STORE #
	WALK-IN COLDROOM DOUBLE-SIDED COOLER SHELVING	2019 NOV	01	B612	2019 NOV		312

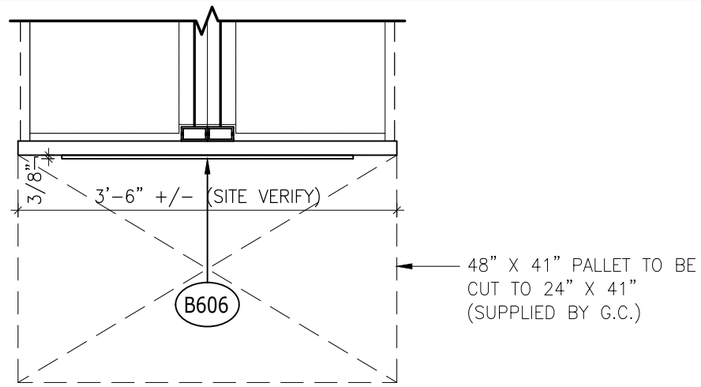

1 / B613 PLAN
3/4" = 1'-0"

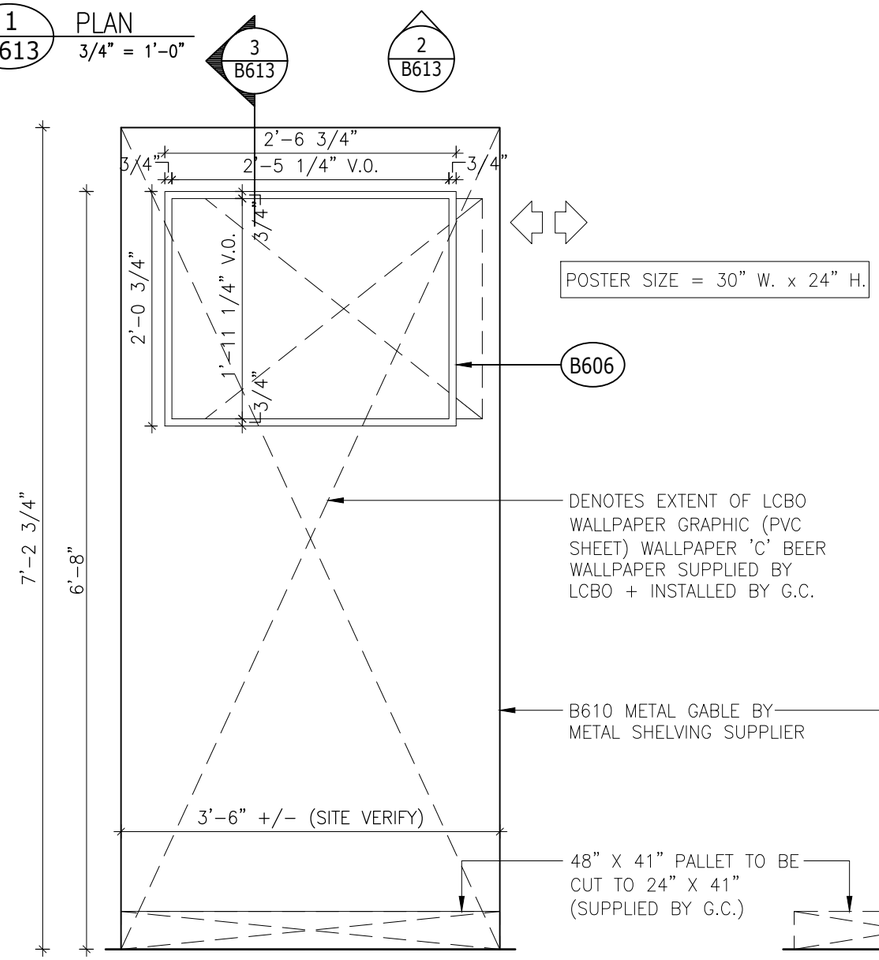

2 / B613 ELEVATION
3/4" = 1'-0"

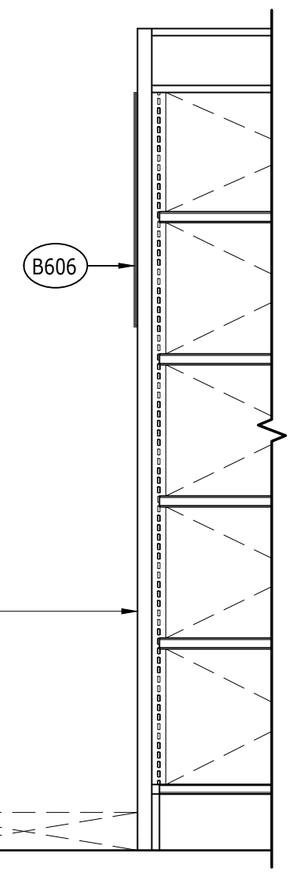

3 / B613 ELEVATION
3/4" = 1'-0"

LCBO	B600 WALK-IN COLDROOM	REVISION DATE	REV.	1 of 1	ISSUE DATE	STORE TYPE	STORE #
	WALK-IN COLDROOM HALF PALLET DISPLAY	2019 NOV	01	B613	2019 NOV		312

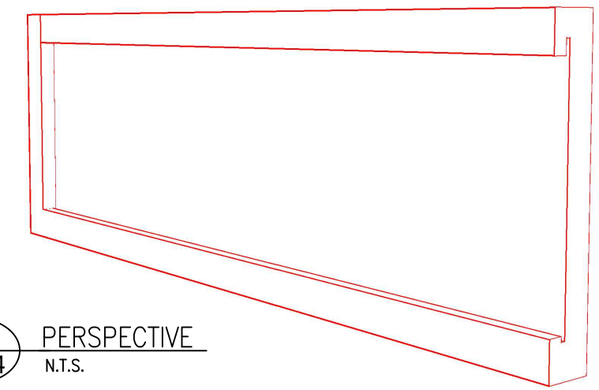

3 / B614 PERSPECTIVE
N.T.S.

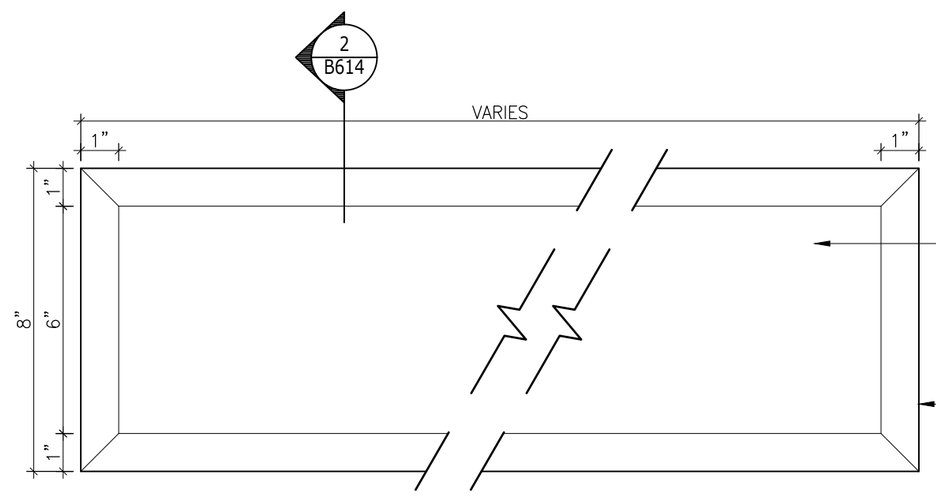

1 / B614 ELEVATION
3" = 1'-0"

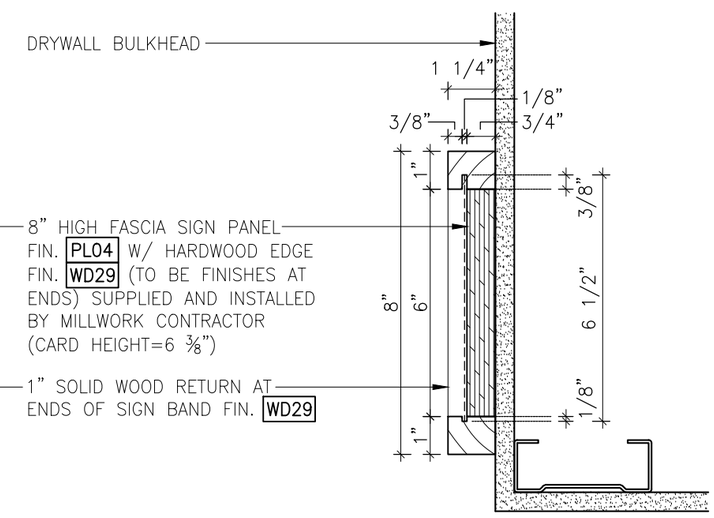

2 / B614 SECTION
3" = 1'-0"

LCBO	B600 WALK-IN COLDROOM	REVISION DATE	REV.	1 of 1	ISSUE DATE	STORE TYPE	STORE #
	WALK-IN COLDROOM DOUBLE-SIDED COOLER SHELVING MILLWORK FASCIA	2019 NOV	01	B614	2019 NOV		312

OCB CANOPY (B615)

042-6557410

73 1/2″ x 10″

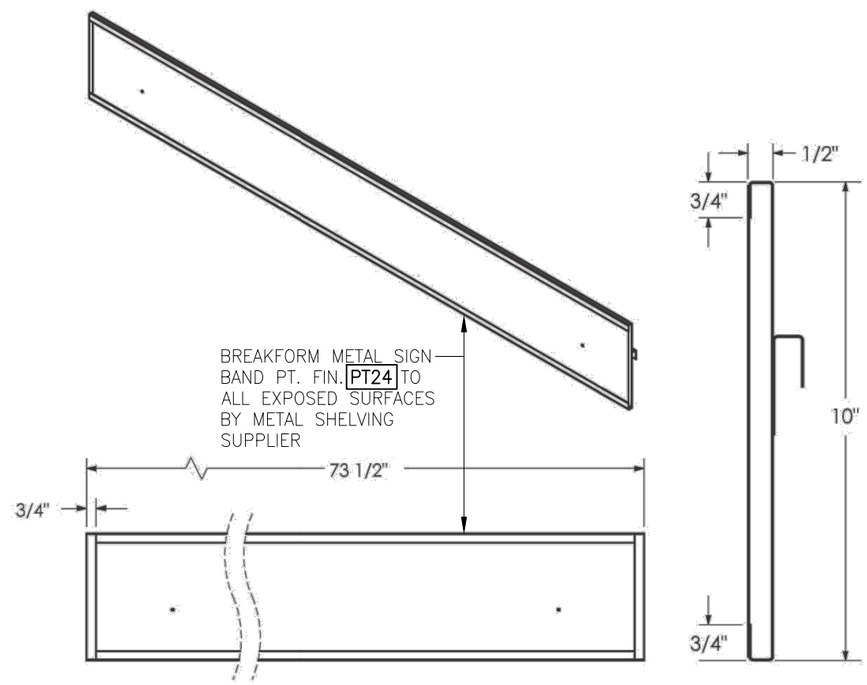

LCBO	B600 WALK-IN COLDROOM	REVISION DATE	REV.	1 of 1	ISSUE DATE	STORE TYPE	STORE #
	WALK-IN COLDROOM 'CRAFT BEER' FASCIA SIGN BAND	2019 NOV	01	B615	2019 NOV		312

3 in 1 Sit Stand

The only seating system designed specifically for bank Customer Service Representatives

As a Sit Stand | As a Sit Stand with a Backrest | As a Task Chair at Counter Height

3 chairs in 1 for every bank Customer Service Representative

The 3 in 1 Sit Stand was designed specifically to be flexible enough to meet the varied needs of Financial Institutions' Customer Service Representatives. Regardless of the task that the Customer Service Representative needs to perform, or the desired standing or sitting position, the 3 in 1 Sit Stand provides the solution.

The Ergonomic Seating Specialists ergoCentric

3 in 1 Sit Stand

Finally a sit stand that overcomes all of the negatives identified by bank Customer Service Representatives (CSR's), a sit stand so well designed for CSR's that they will thank you for it. The unique No Slip Strip makes the 3 in 1 Sit Stand the most user friendly sit stand available with three seating options.

The 3 in 1 Sit Stand is three chairs in one seating system. ergoCentric worked with one of Canada's leading Financial Institutions to create a seating system that could be used as a sit stand or as a counter height task chair. Now the 3 in 1 Sit Stand is that Financial Institution's official seating for in-branch CSR's. The 3 in 1 Sit Stand meets the exacting specifications of ergonomists and the varied desires of CSR's.

- Use as a sit stand with our durable No Slip Strip
- Use as a sit stand with a back support
- Use as a counter height task chair
- Two casters allow for easy movement from station to station or out of the way
- Three glides provide stability when perching

Moves Easily

specifications

Backrest
- Fully upholstered backrest **(14" wide by 10" high)**
- 4" of back height adjustment

Seat
- Upholstered seat with dual density molded polyurethane foam with No Slip Strip
- Seat Pan **(17.5" wide by 15.5" deep)**

Control Mechanism
- Geometric shaped adjustment paddles and icon plates make Adjustability Understood™:
  - *Single lever provides synchronized back and seat angle adjustment – circle paddle*
  - *Pneumatic seat height adjustment – square paddle*

Pneumatic Lift
- The highest seat height will work with the highest of counter tops. At the lowest seat height the chair can be used as a desk chair, providing bank branches with complete flexibility. (we almost called it the 4 in 1 Sit Stand)
- 200mm knurled (Adjustment between 19.25" - 35.5") (Dual height adjustment system)

Base/Glides/Casters
- 22" Chrome 22 Base has an 18" oval tube footring built in for durability
- Two dual wheel nylon 2¼" casters and three 2¼" glides

Warranty

*LIFETIME **
- Original purchaser
- Defects and functional failure of materials up to a weight of 280 lbs
- With the following exceptions:

*10 YEARS **
- Mechanisms, arms, foam, fabric

* Includes labor costs

additional options

Options

As with all ergoCentric seating systems the 3 in 1 Sit Stand is completely modular allowing you to add arms, change the seat size, base, casters, glides and cylinders to suit changing needs.
- Fixed and adjustable arm options
- Caster and glide options

Visit our website for more details at www.ergocentric.com.

ergoCentric SEATING • SYSTEMS

GREENGUARD Indoor Air Quality Certified

Printed on recycled paper
Printed in Canada
BR3IN1ENG

Tel: 1-866-GET ERGO (438 3746) Fax: 1-800-848-5190 service@ergocentric.com

3 in 1 sit & stand stool or approved alternate

Backrest:
Fully upholstered backrest (14" wide x 10" high)

Seat:
seat pan (17.5" wide by 15.5" deep)

Upholstery:
Vinyl - Gunmetal US 392

Control Mechanism:
Geometric shaped adjustment paddles and icon plates

Pneumatic Lift:
200mm Knurled Dual Height Adjustment System (seat height 7.5" of adjustment between 19.25"- 35.5")

Base/Glide/Casters:
22" Chrome 22 Base has an 18" oval tube footring built in for durability
5 lock on casters

Contact:
Debbie Bettencourt
Customer Account Manager
1-866-438-3746 ext. 229
debbieb@ergocentric.com
www.ergocentric.com

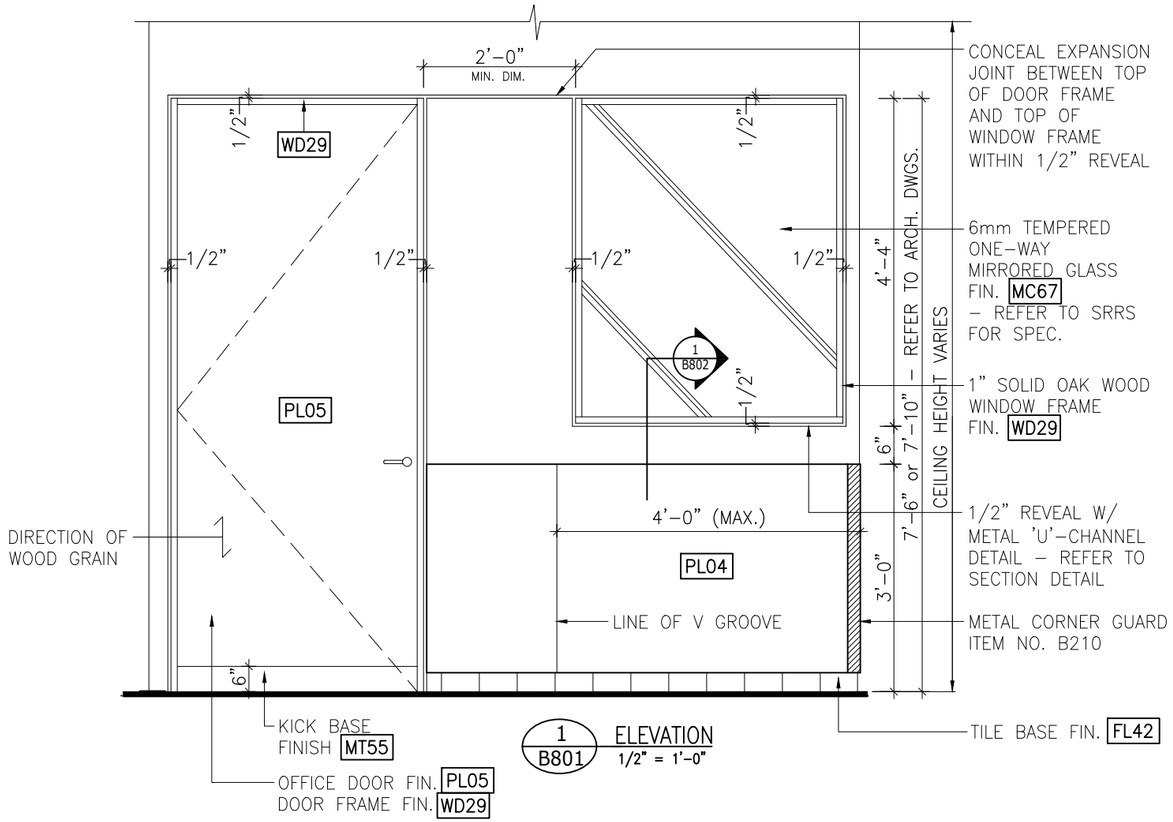

1 B801 ELEVATION
1/2" = 1'-0"

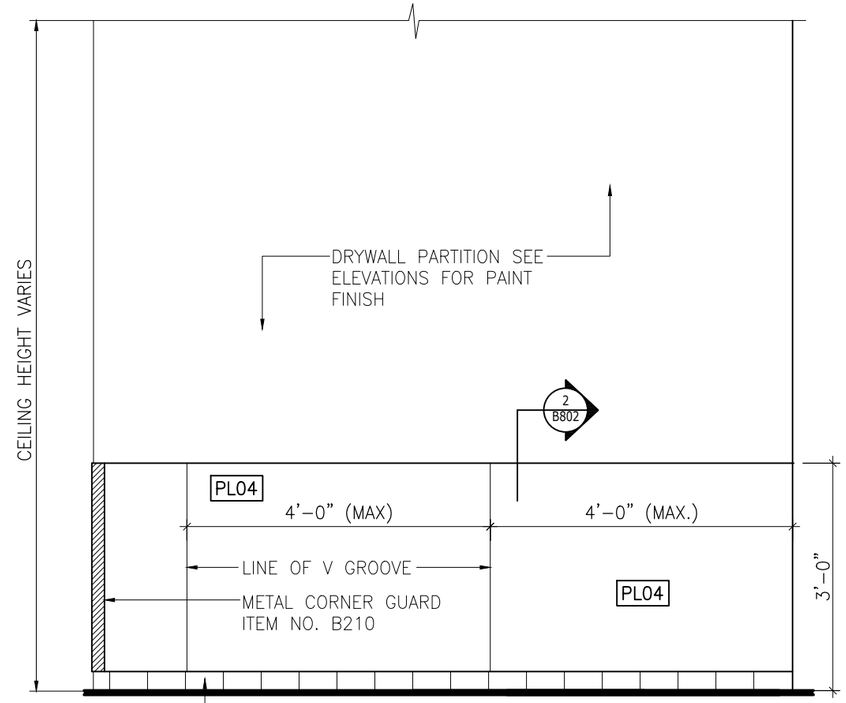

2 B801 ELEVATION
1/2" = 1'-0"

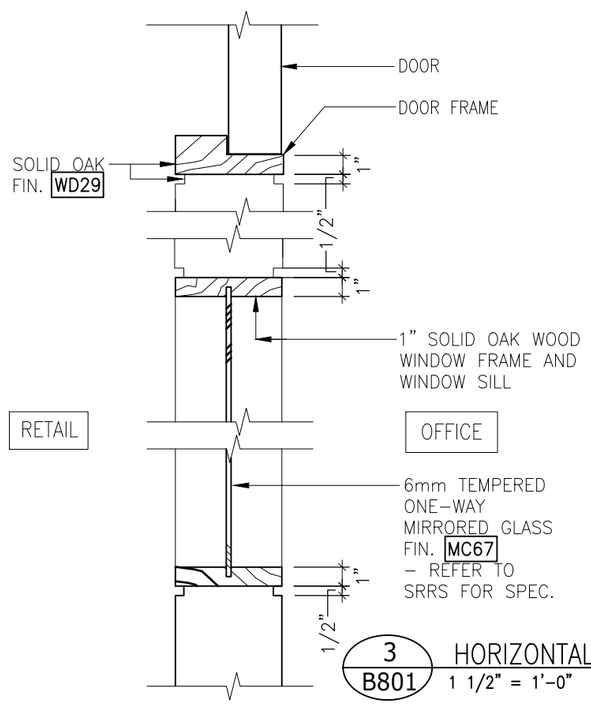

3 B801 HORIZONTAL SECTION DETAIL
1 1/2" = 1'-0"

GENERAL NOTES:

G.C. TO PROVIDE AND INSTALL KEYBOARD TRAYS AND PEDESTAL UNITS.
REFER TO PROJECT SPECIFICATION BOOK.

MANAGER'S OFFICE LAYOUT VARIES. REFER TO ARCHITECTURAL DRAWINGS FOR OVERALL DIMENSIONS.

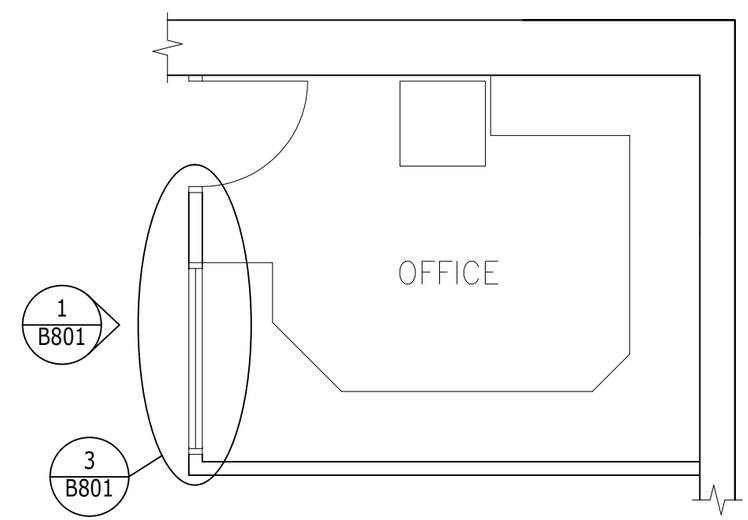

4 B801 OFFICE KEY PLAN
3/4" = 1'-0"

2 B801

LCBO	B800 OFFICE/SERVICES	REVISION DATE	REV.	1 of 1	ISSUE DATE	STORE TYPE	STORE #
	OFFICE GLAZING	2019 NOV	01	B801	2019 NOV		312

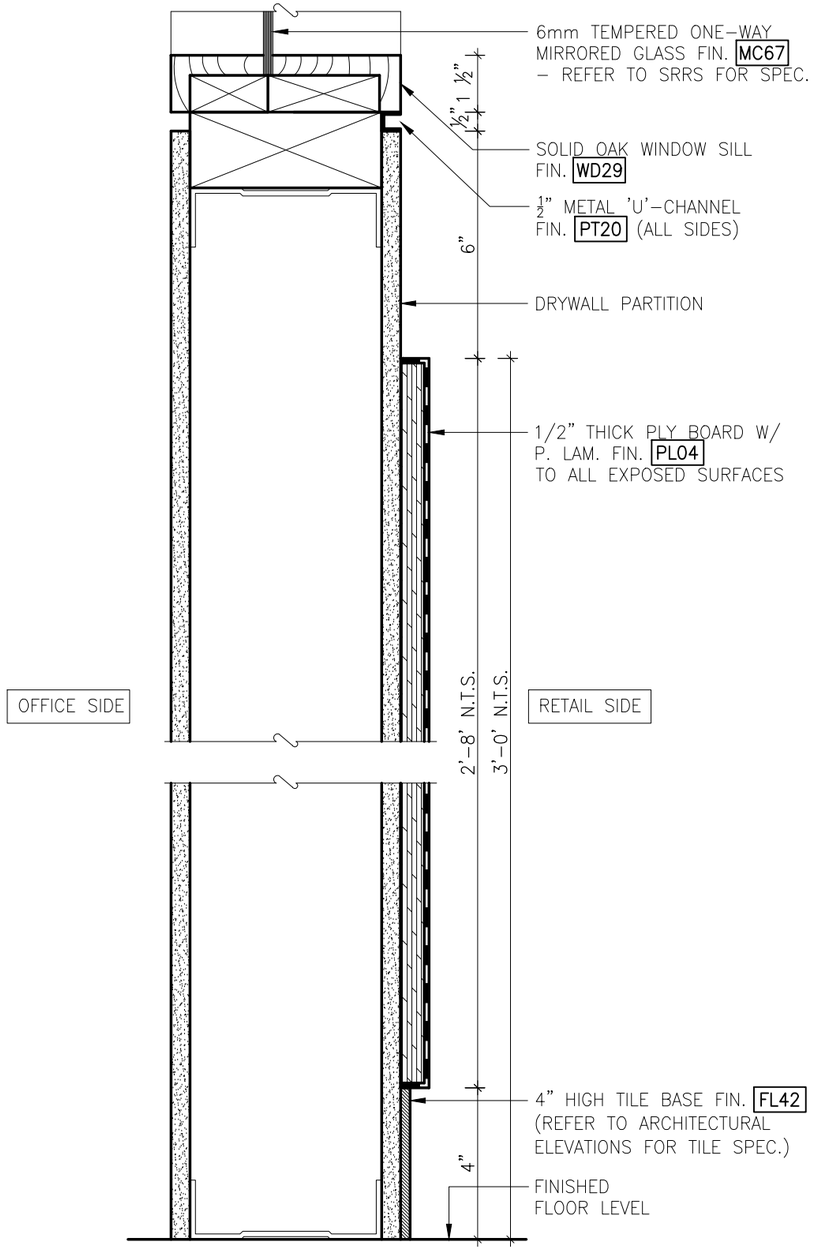

1 B802 TYPICAL SECTION THROUGH OFFICE GLAZING
N.T.S.

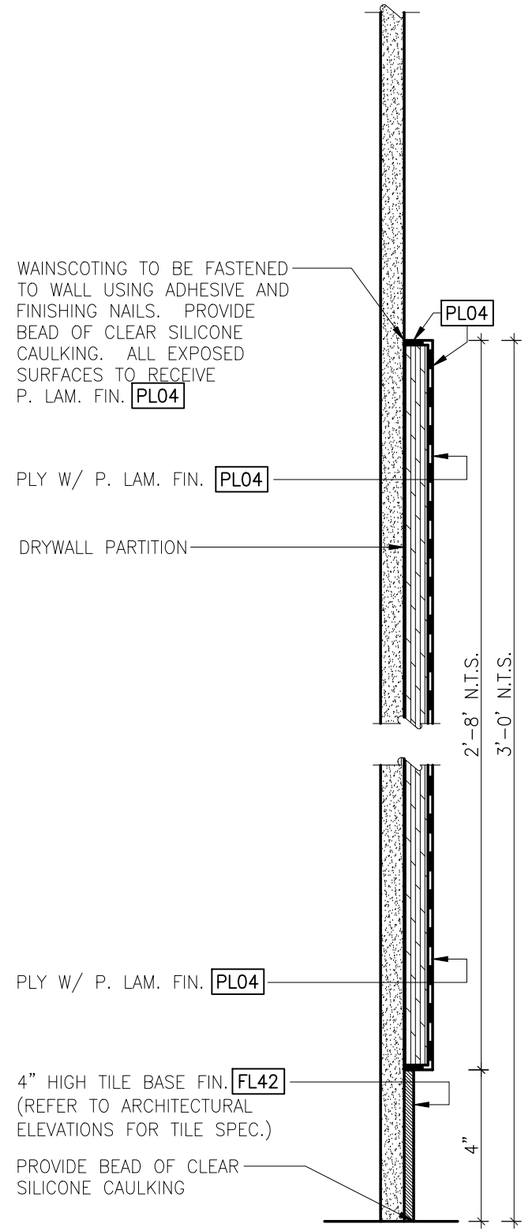

2 B802 TYPICAL SECTION THROUGH WAINSCOTING
N.T.S.

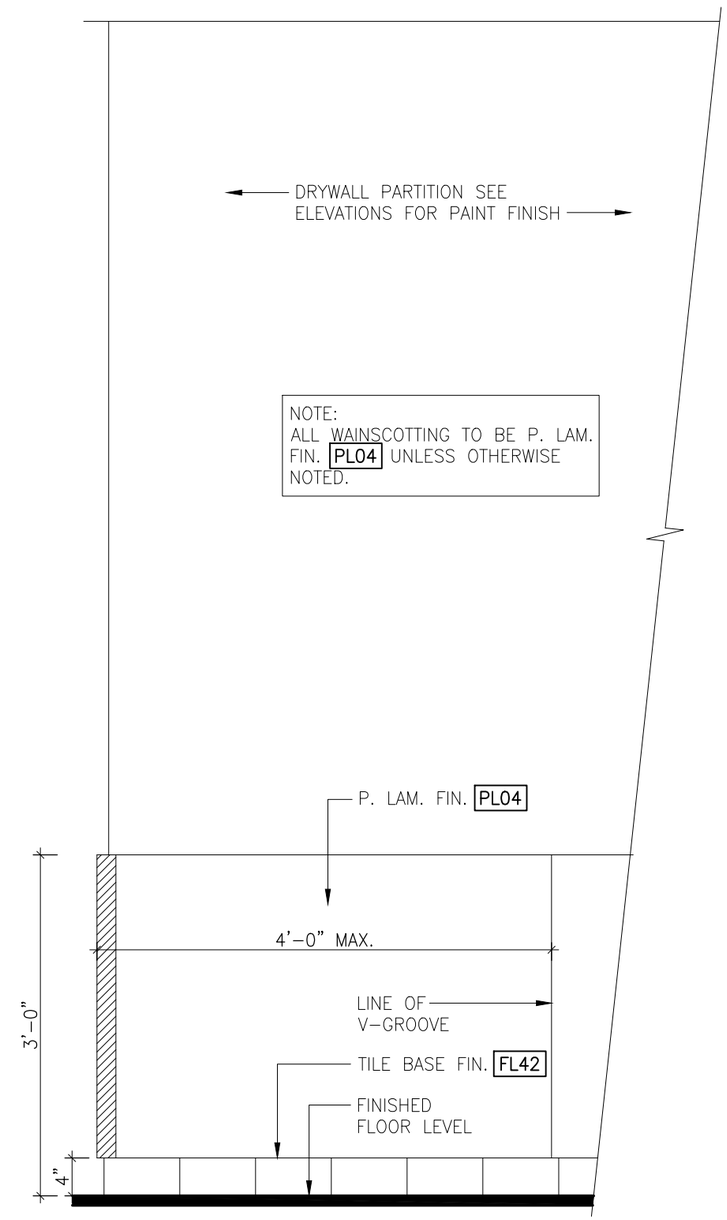

3 B802 ELEVATION DETAIL OF WAINSCOTING
SCALE: 3/4"=1'-0"

LCBO	B800 OFFICE/SERVICES	REVISION DATE	REV.	1 of 1	ISSUE DATE	STORE TYPE	STORE #
	TYPICAL OFFICE & WAINSCOTING DETAIL	2019 NOV	01	B802	2019 NOV		312

LEGEND

ITEM NO.	DESCRIPTION
F-1	PRINTER SUPPIED BY LCBO. FAX LINE TO BE PROVIDED BY G.C.
F-2	(1x) 36" x 48" BULLETIN BOARD & (1x) 36" x 48" WHITE BOARD SUPPLIED & INSTALLED BY G.C. LOCATION TO BE DETERMINED ON SITE AT LCBO'S DIRECTION.
F-3	ADJUSTABLE KEYBOARD TRAY SUPPLIED & INSTALLED BY G.C. (REFER TO SRRS)
F-4	SINGLE PEDESTAL FILE CABINET SUPPLIED & INSTALLED BY G.C. (REFER TO SRRS) SEE PLAN FOR QUANTITY
F-5	2 DR. LATERAL FILE CABINET SUPPLIED & INSTALLED BY G.C. (REFER TO SRRS)
F-6	TASK CHAIR SUPPLIED & INSTALLED BY G.C. (REFER TO SRRS) SEE PLAN FOR QUANTITY
F-7	COMBOX ABOVE SAFE SUPPLIED & INSTALLED BY OTHERS.
F-8	SAFE SUPPLIED & INSTALLED BY OTHERS
F-9	(2X) OPEN SHELVING CABINET (NO DOORS) (MIN. INTERIOR DIM. 2'-2" W X 1'-7 1/4" D) ABOVE COUNTER SUPPLIED & INSTALLED BY G.C. NOTE: FOR STORES UNDER 5,000 SQ.FT. (1X) OPEN UNIT REQ'D.
F-10	NVR MONITOR SUPPLIED & INSTALLED BY LCBO.
F-11	(1X) CPU HOLDERS FOR THE P.O.S CPU SECURED TO THE U/S OF THE COUNTER (REFER TO SRRS) SUPPLIED & INSTALLED BY G.C FINAL LOCATIONS TO BE DETERMINED ON SITE. NOTE: (1X) B.O.S. CPU & (1X) BACK OFFICE SERVER WILL SIT ON COUNTER BY LCBO

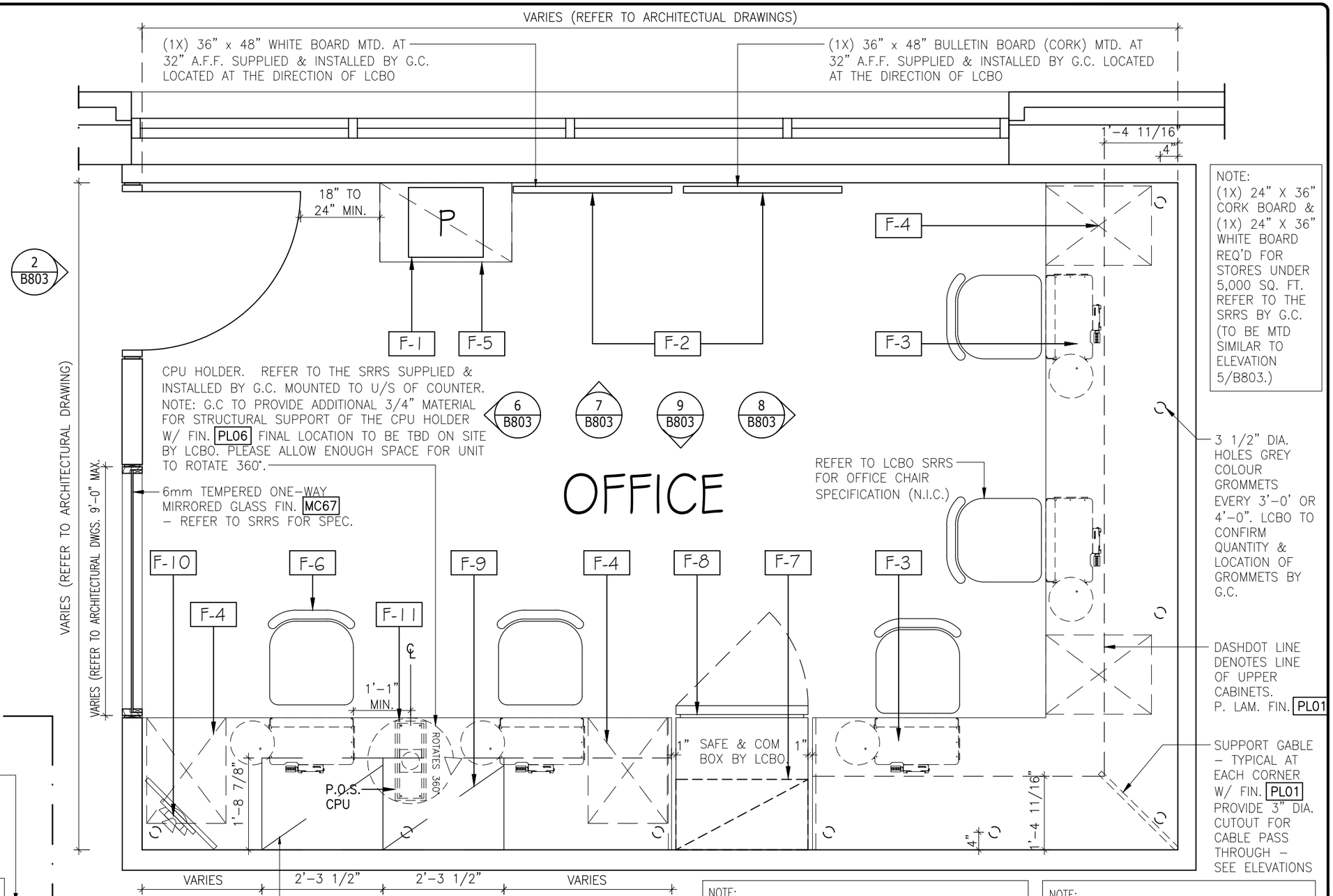

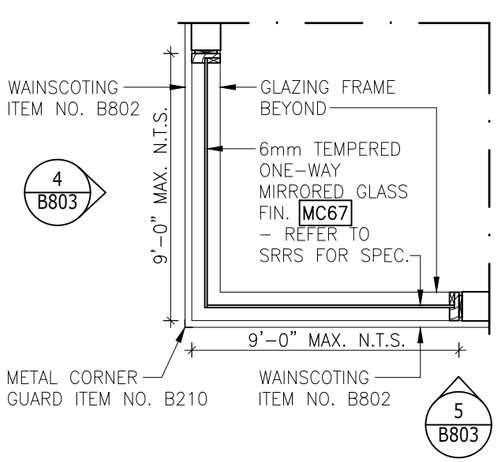

NOTE:
G.C. TO PROVIDE MILLWORK SHOP DRAWINGS INDICATING ALL PROPOSED WORKSURFACE SEAM LOCATIONS AND SUPPORT GABLE LOCATIONS FOR REVIEW PRIOR TO MILLWORK FABRICATION.

PROVIDE 3" DIA. CUTOUT IN ALL VERTICAL SUPPORT GABLES (EXCEPT END PANELS) FOR CABLE PASS THROUGH.

NOTE:
ALL UPPER CABINETS TO BE FIN. PL01 ON ALL SURFACES.

ALL COUNTER TOP W/ BACK SPLASH TO BE FIN. PL06 C/W COLOUR MATCHED PVC FRONT EDGE

ALL SUPPORT GABLES TO BE FIN. PL01

1a B803 ALTERNATE CORNER GLAZING DETAIL
1/2" = 1'-0"

1 B803 TYPICAL OFFICE PLAN
1/2" = 1'-0"

LCBO	B800 OFFICE/SERVICES	REVISION DATE	REV.	1 of 7	ISSUE DATE	STORE TYPE	STORE #
	MANAGER'S OFFICE MILLWORK	2019 NOV	01	B803	2019 NOV		312

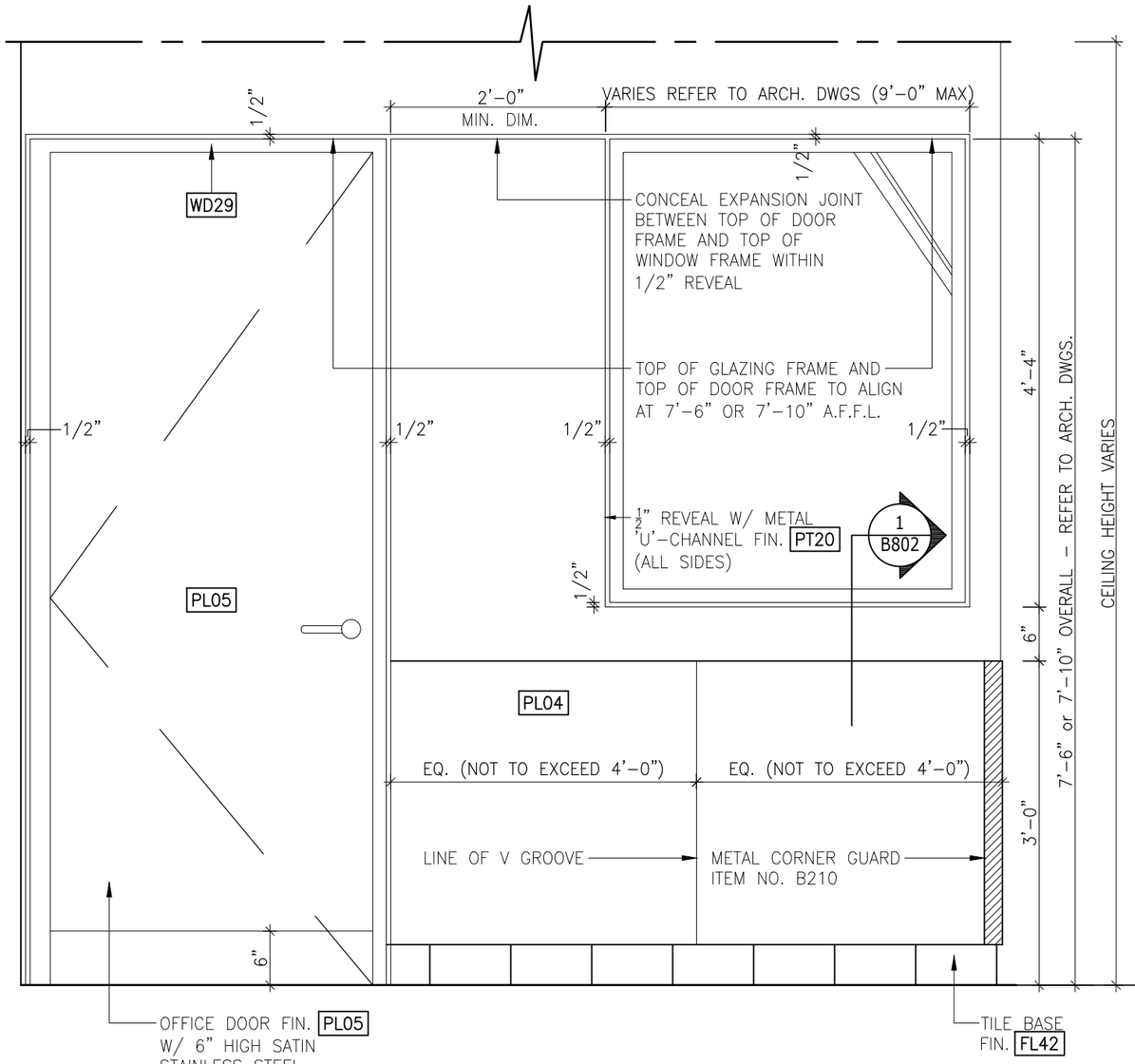

2 B803 ELEVATION
3/4" = 1'-0"

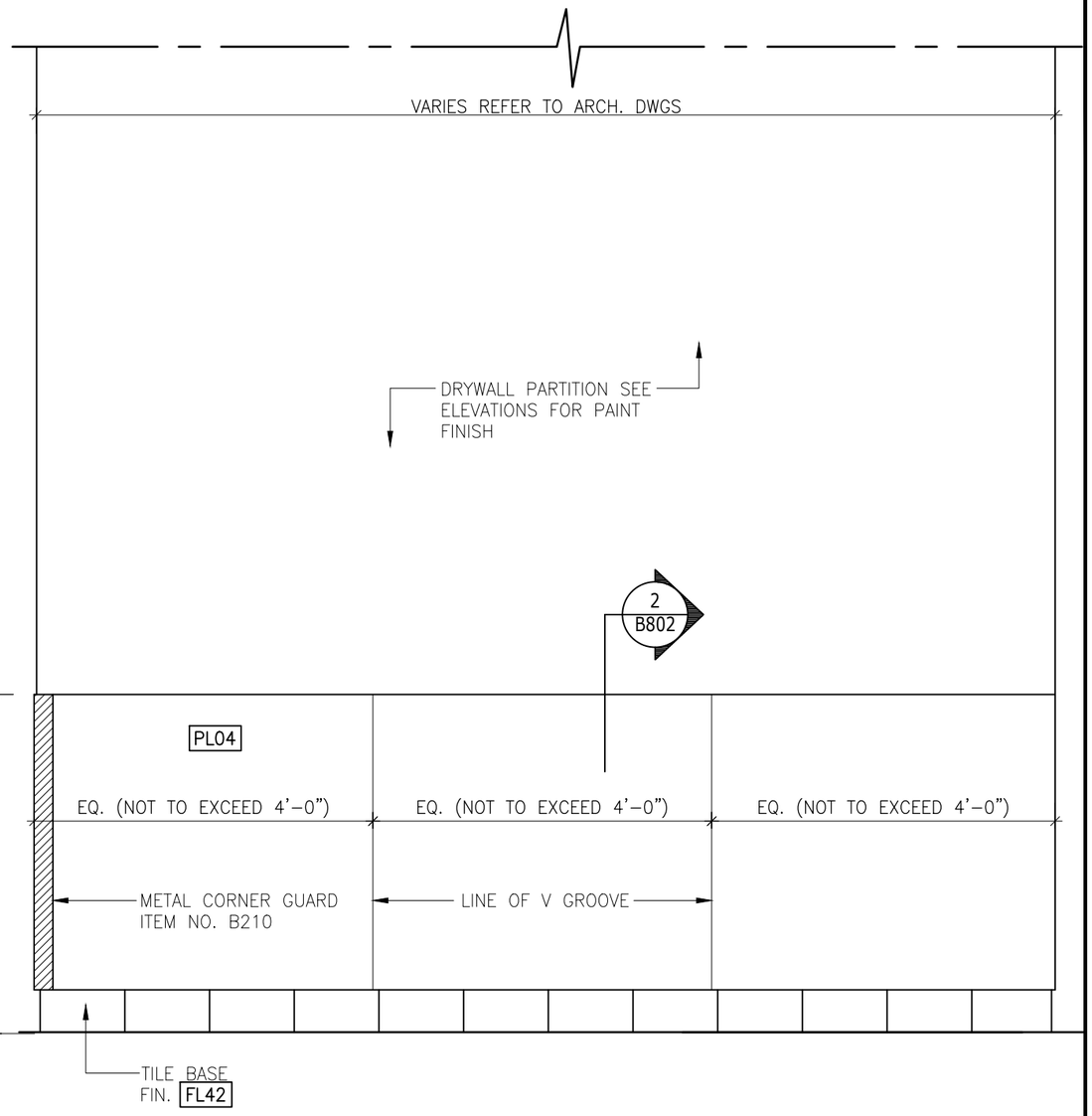

3 B803 ELEVATION
3/4" = 1'-0"

LCBO	B800 OFFICE/SERVICES	REVISION DATE	REV.	2 of 7	ISSUE DATE	STORE TYPE	STORE #
	MANAGER'S OFFICE MILLWORK	2019 NOV	01	B803	2019 NOV		312

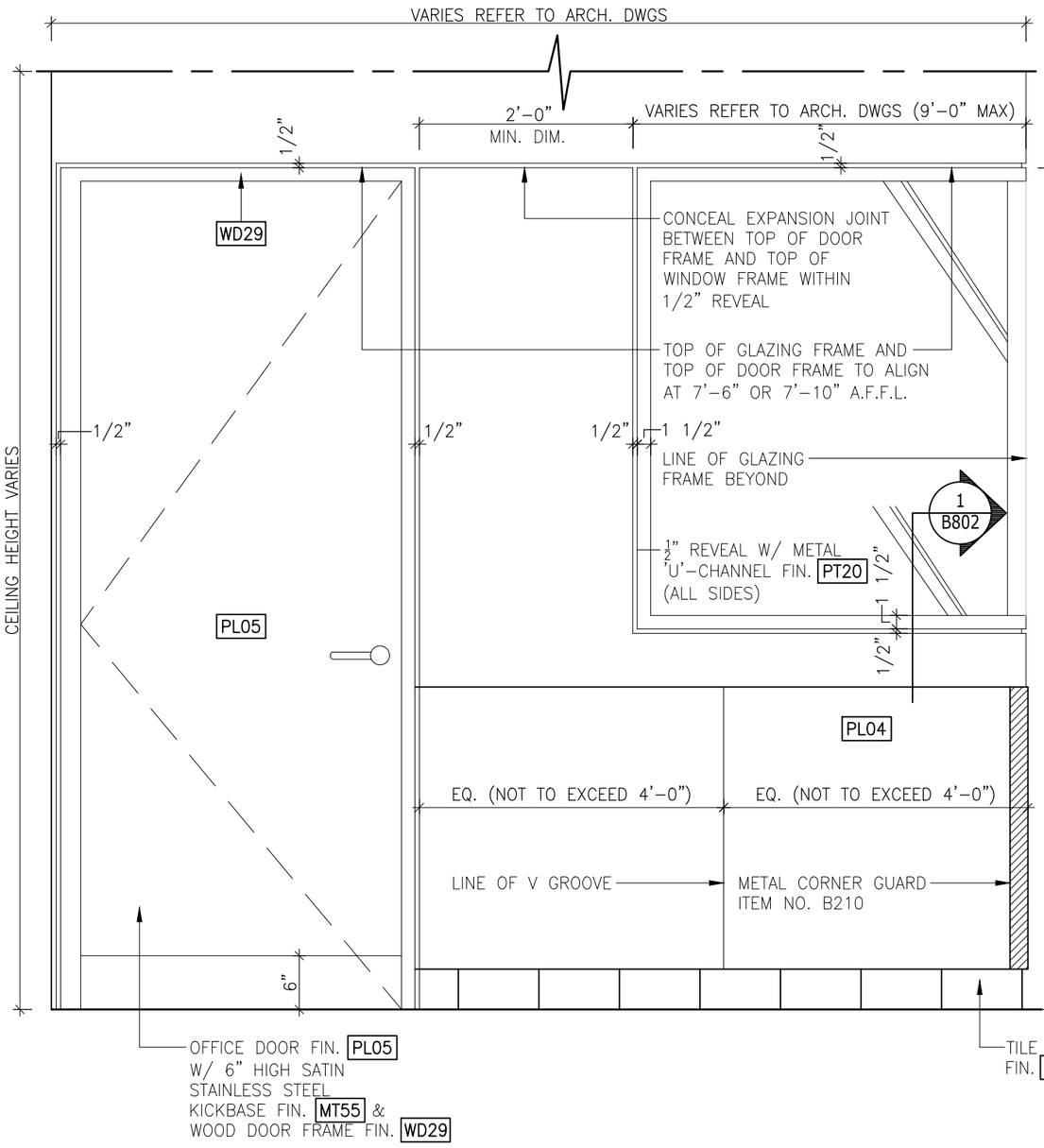

4 B803 ELEVATION
3/4" = 1'-0"

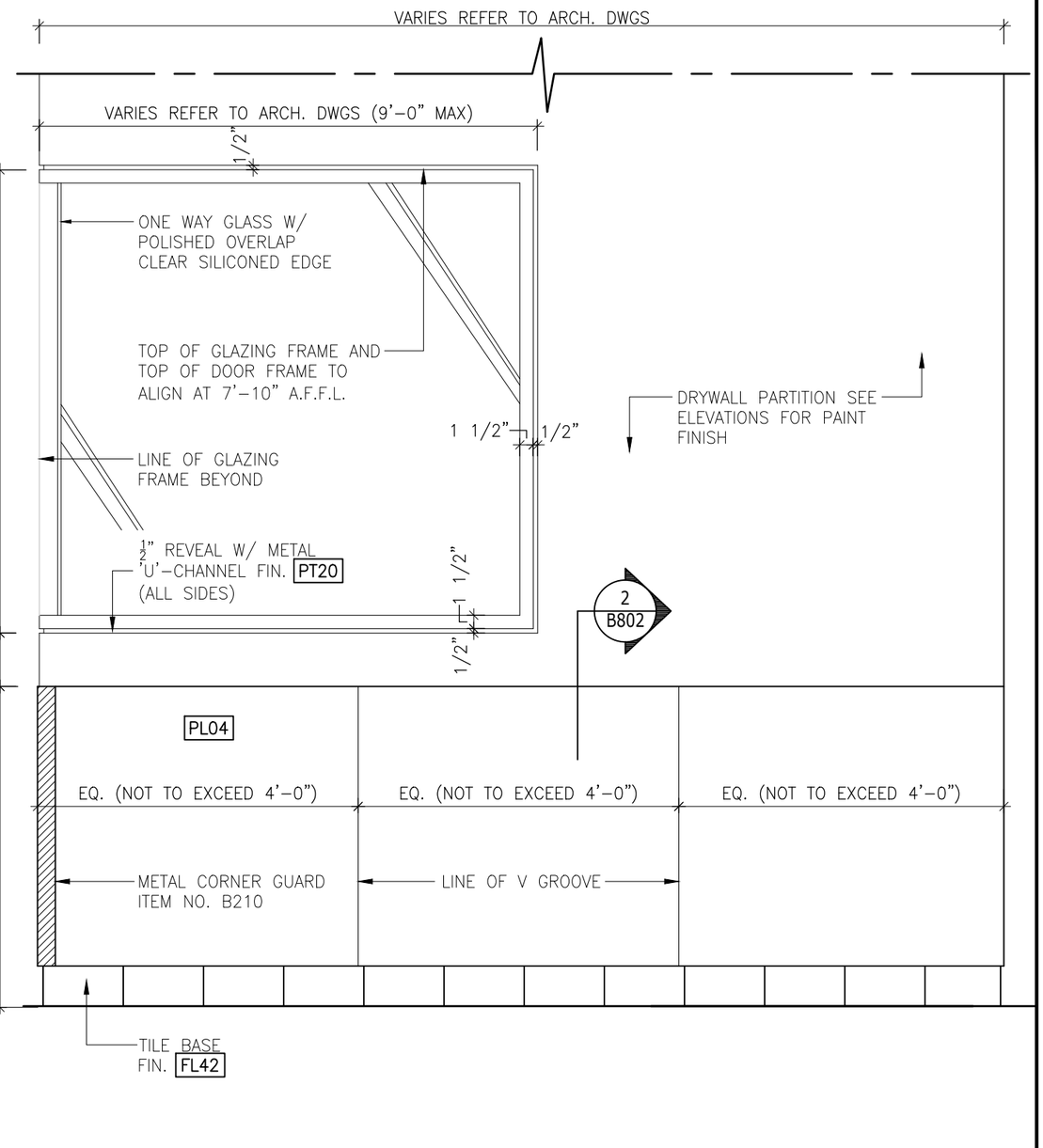

5 B803 ELEVATION
3/4" = 1'-0"

LCBO	B800 OFFICE/SERVICES	REVISION DATE	REV.	3 of 7	ISSUE DATE	STORE TYPE	STORE #
	MANAGER'S OFFICE MILLWORK	2019 NOV	01	B803	2019 NOV		312

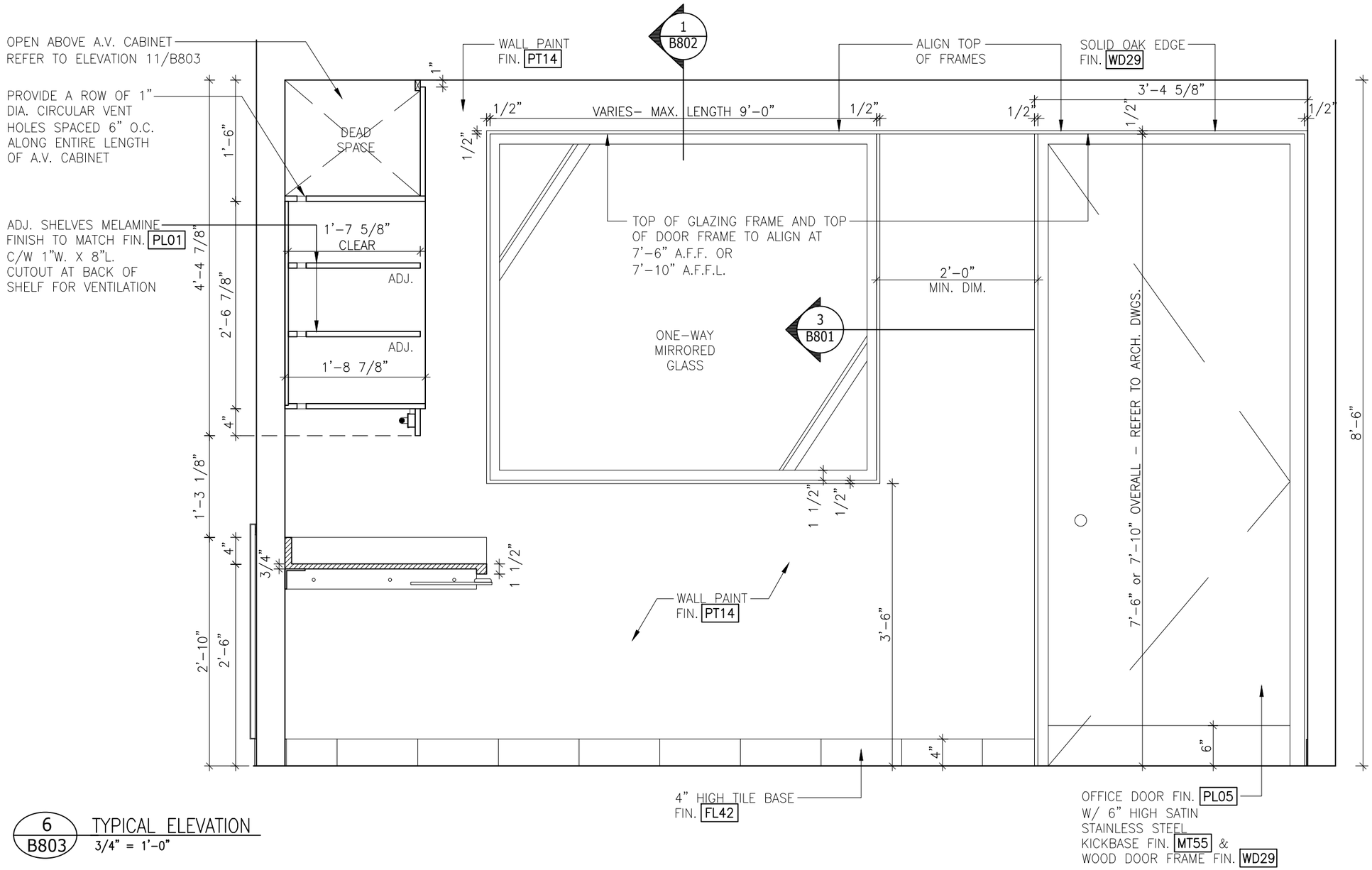

6 / B803 TYPICAL ELEVATION
3/4" = 1'-0"

LCBO	B800 OFFICE/SERVICES	REVISION DATE	REV.	4 of 7	ISSUE DATE	STORE TYPE	STORE #
	MANAGER'S OFFICE MILLWORK	2019 NOV	01	B803	2019 NOV		312

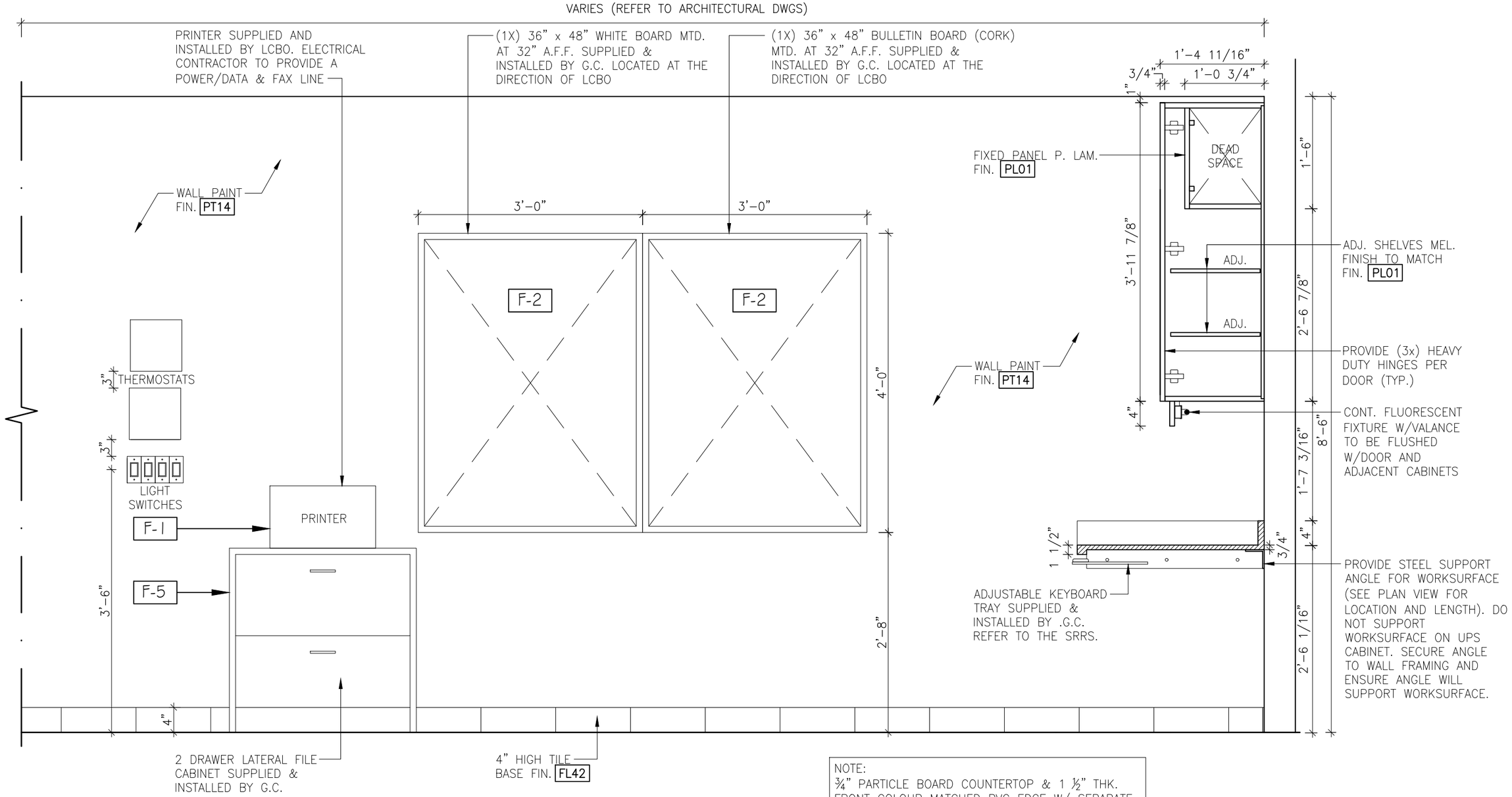

7 / B803 TYPICAL ELEVATION
3/4" = 1'-0"

NOTE:
¾" PARTICLE BOARD COUNTERTOP & 1 ½" THK. FRONT COLOUR MATCHED PVC EDGE W/ SEPARATE POST FORMED BACK SPLASH W/ 1" FOR SCRIBBING W/ FIN. PL06 ALL UPPER CABINETS AND SUPPORT GABLES FOR COUNTER TO BE FIN. PL01 UNLESS SPECIFIED OTHERWISE.

NOTE:
G.C. TO PROVIDE AND INSTALL ALL TASK CHAIRS, KEYBOARD TRAYS, PEDESTALS AND CPU HOLDERS. REFER TO LCBO SRRS.

LCBO	B800 OFFICE/SERVICES	REVISION DATE	REV.	5 of 7	ISSUE DATE	STORE TYPE	STORE #
	MANAGER'S OFFICE MILLWORK	2019 NOV	01	B803	2019 NOV		312

NOTE:
CABINETS DOORS TO BE INDUSTRY STANDARD SIZES 12", 15", 18" ADD FILLERS WHERE NEEDED. CABINET DOORS SHOULD NOT EXCEED 18" WIDE.

CABINET LOCKS BY HAFELE:
LOCK CORE – 210.04.615 (POLISHED NICKEL)
CAM LOCK BODY – 235.08.303
CYLINDER ROSETTE – 210.04.062

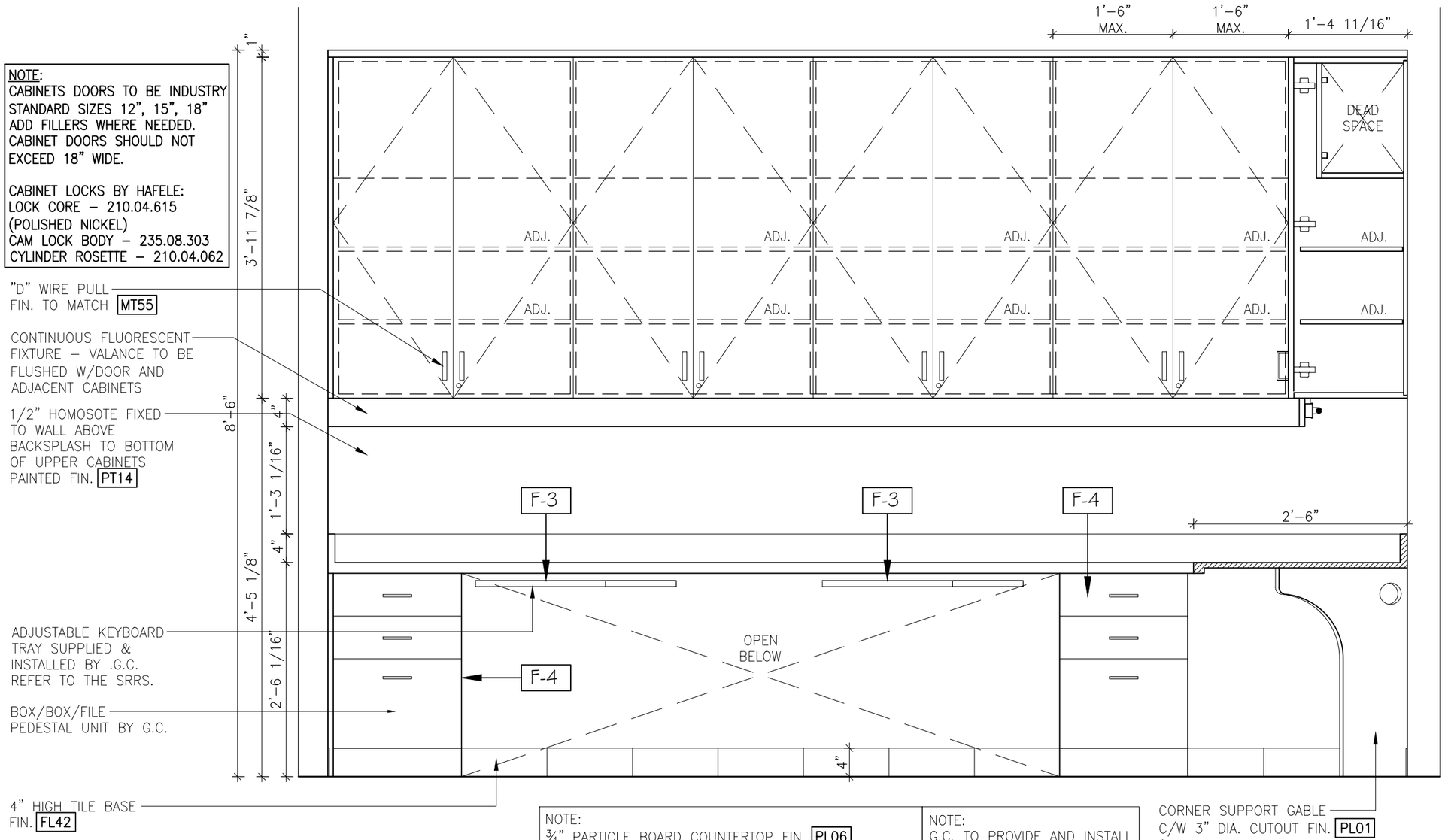

NOTE:
¾" PARTICLE BOARD COUNTERTOP FIN. PL06 W/ 1 ½" FRONT COLOUR MATCHED PVC EDGE & SEPARATE BACKSPLASH W/ 1" FOR SCRIBING. ALL UPPER CABINETS AND SUPPORT GABLES FOR COUNTER TO BE FIN. PL01 UNLESS SPECIFIED OTHERWISE.

NOTE:
G.C. TO PROVIDE AND INSTALL ALL KEYBOARD TRAYS, PEDESTALS AND CPU HOLDERS. REFER TO PROJECT SPECIFICATION BOOK.

8 / B803 TYPICAL ELEVATION
3/4" = 1'-0"

LCBO	B800 OFFICE/SERVICES	REVISION DATE	REV.	6 of 7	ISSUE DATE	STORE TYPE	STORE #
	MANAGER'S OFFICE MILLWORK	2019 NOV	01	B803	2019 NOV		312

NOTE:
CABINETS DOORS TO BE INDUSTRY STANDARD SIZES 12", 15", 18" ADD FILLERS WHERE NEEDED. CABINET DOORS SHOULD NOT EXCEED 18" WIDE.

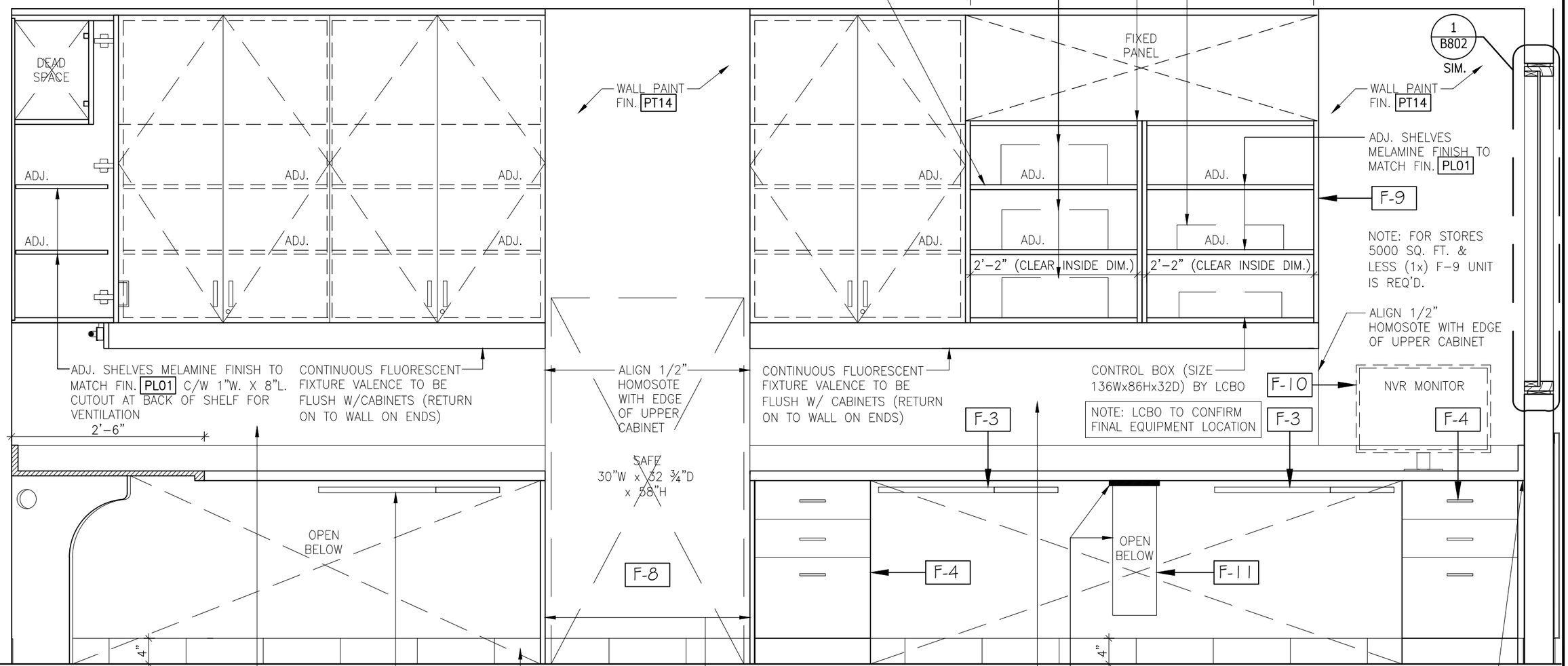

NOTE:
3/4" PARTICLE BOARD COUNTERTOP FIN. PL06 W/ 1 1/2" FRONT COLOUR MATCHED PVC EDGE & SEPARATE BACKSPLASH W/ 1" FOR SCRIBING. ALL UPPER CABINETS AND SUPPORT GABLES FOR COUNTER TO BE FIN. PL01 UNLESS SPECIFIED OTHERWISE.

NOTE:
G.C. TO PROVIDE AND INSTALL KEYBOARD TRAYS AND PEDESTALS.
REFER TO PROJECT SPECIFICATION BOOK.

9 / B803 TYPICAL ELEVATION
3/4" = 1'-0"

LCBO	B800 OFFICE/SERVICES	REVISION DATE	REV.	7 of 7	ISSUE DATE	STORE TYPE	STORE #
	MANAGER'S OFFICE MILLWORK	2019 NOV	01	B803	2019 NOV		312

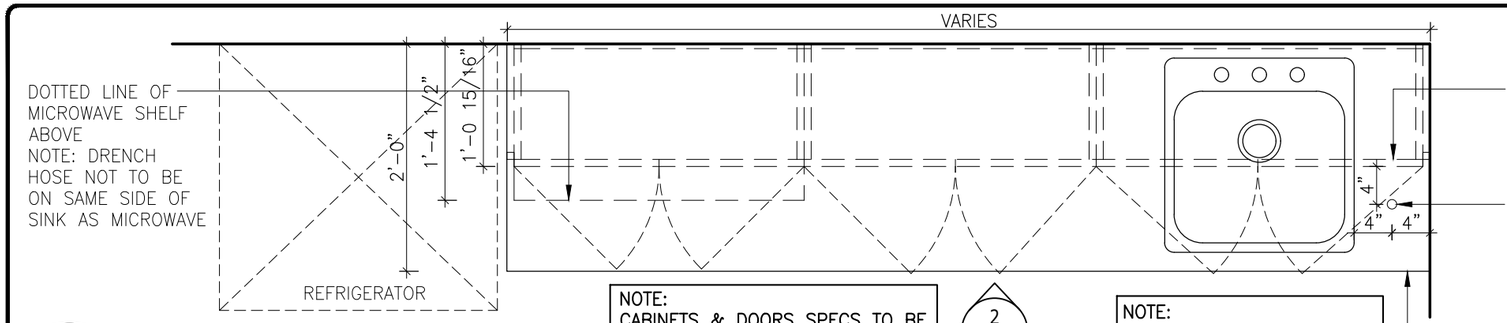

1 B804 PLAN
3/4" = 1'-0"

NOTE:
CABINETS & DOORS SPECS TO BE INDUSTRY STANDARD SIZES:
12", 15", 18", 24", 30", 36"
ADD FILLERS WHERE NEEDED

2 B804

3 B804

NOTE:
G.C. TO CONFIRM FINAL DRENCH HOSE LOCATION W/ LCBO COORDINATOR

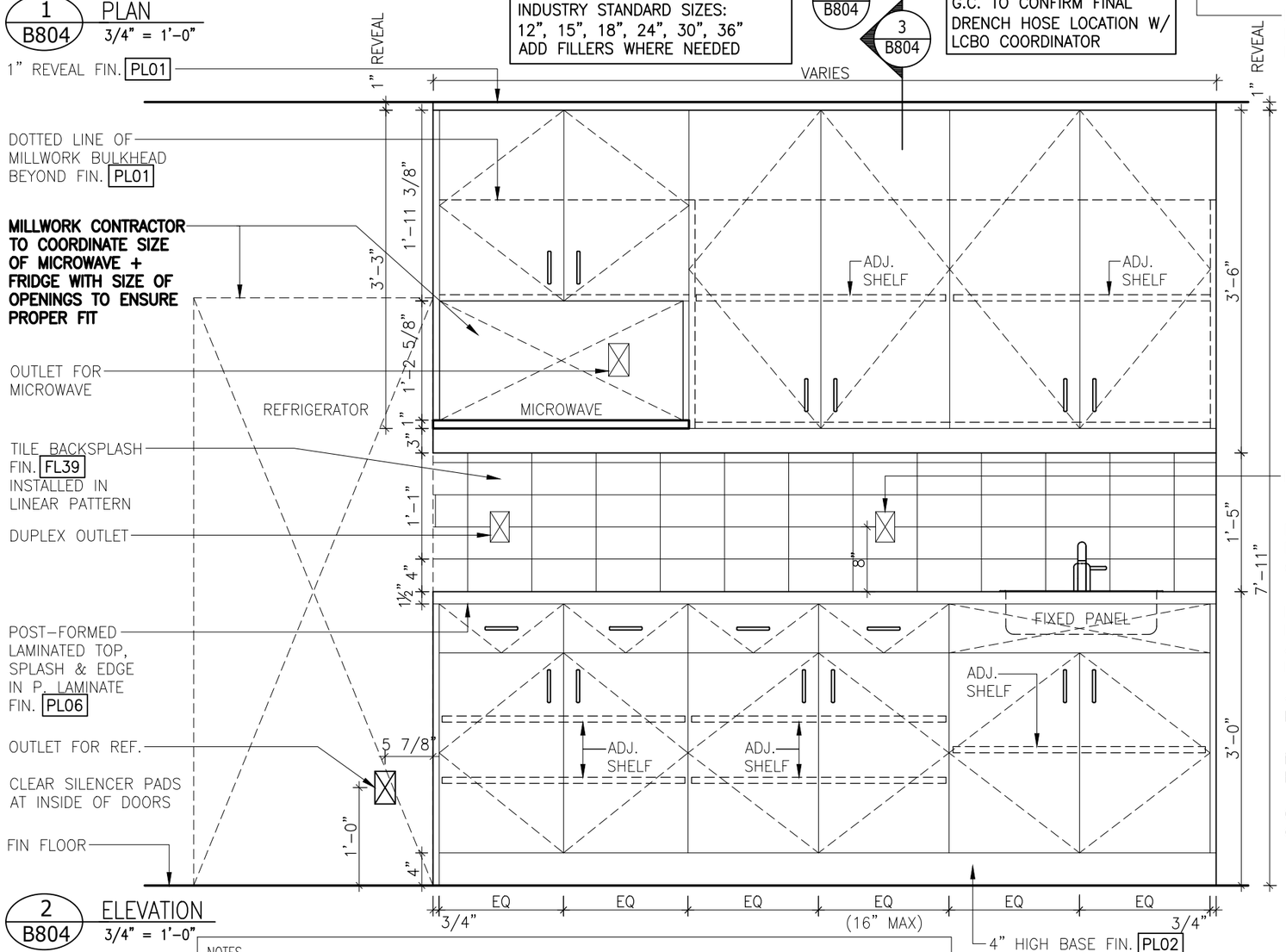

2 B804 ELEVATION
3/4" = 1'-0"

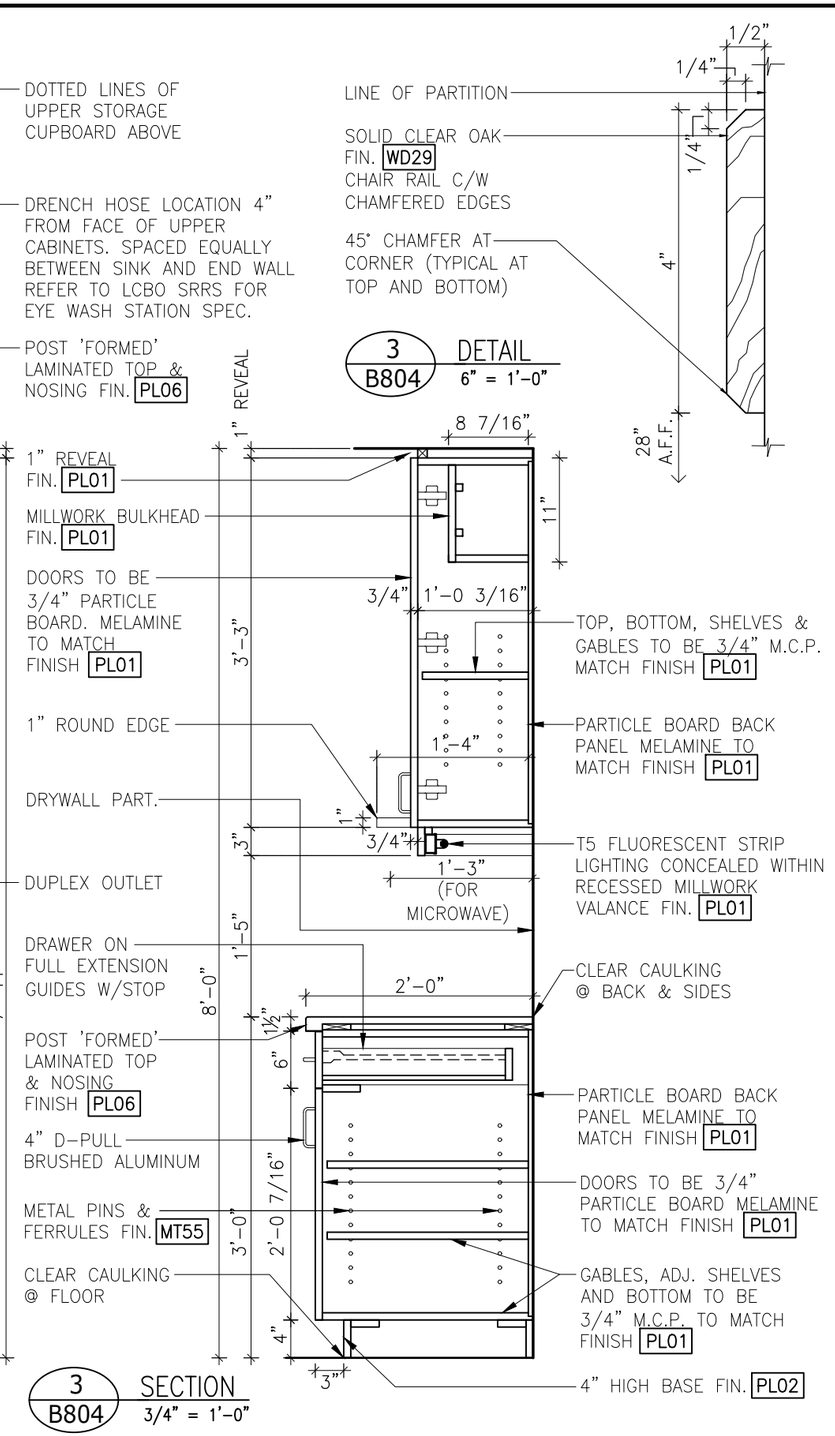

3 B804 DETAIL
6" = 1'-0"

3 B804 SECTION
3/4" = 1'-0"

NOTES
- LAYOUT VARIES TO SUIT STORE. REFER TO ARCHITECTURAL DRAWING PACKAGE FOR SPECIFIC LAYOUT.
- ALL INTERIOR COMPONENTS TO BE 3/4" PARTICLE BOARD WITH MELAMINE TO MATCH FIN. PL01 UNLESS OTHERWISE NOTED.
- REFER TO ARCHITECTURAL SPECIFICATIONS FOR SINK, MICROWAVE, AND REFRIGERATOR SPECIFICATIONS.
- ALL EXTERIOR COMPONENTS AND DOORS, DRAWERS AND SHELVES TO BE PLASTIC LAMINATE FIN. PL01

LCBO	B800 OFFICE/SERVICES	REVISION DATE	REV.	1 of 1	ISSUE DATE	STORE TYPE	STORE #
	STAFF LUNCH ROOM MILLWORK	2019 NOV	01	B804	2019 NOV		312

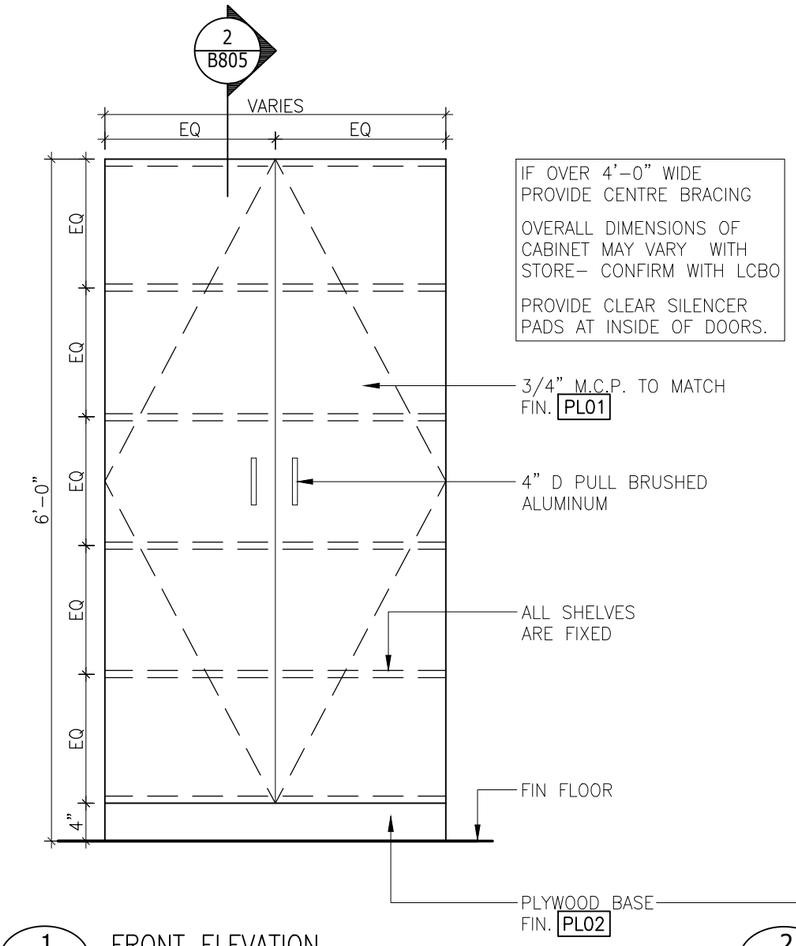

1 B805 FRONT ELEVATION
3/4" = 1'-0"

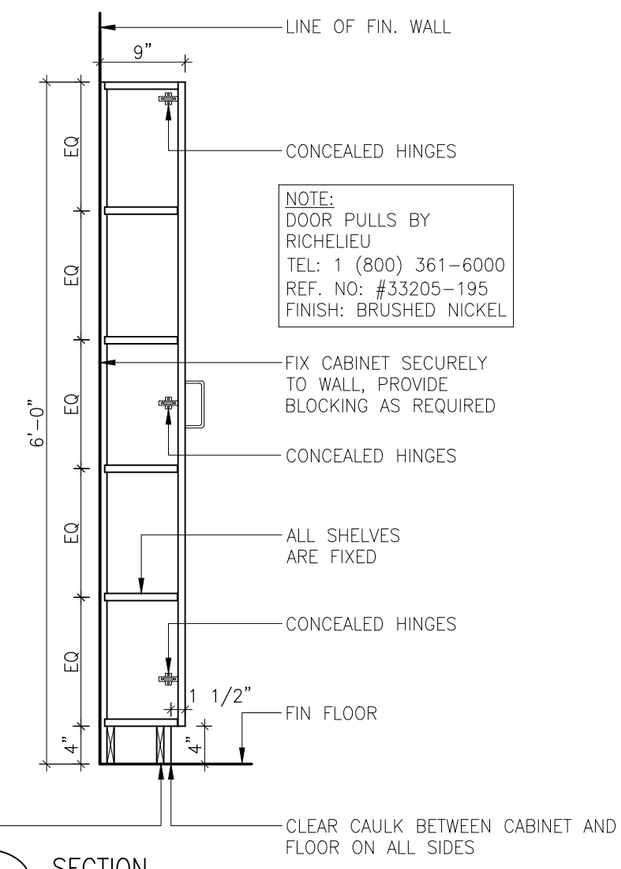

2 B805 SECTION
3/4" = 1'-0"

LCBO	B800 OFFICE/SERVICES	REVISION DATE	REV.	1 of 1	ISSUE DATE	STORE TYPE	STORE #
	WASHROOM STORAGE CABINET	2019 NOV	01	B805	2019 NOV		312

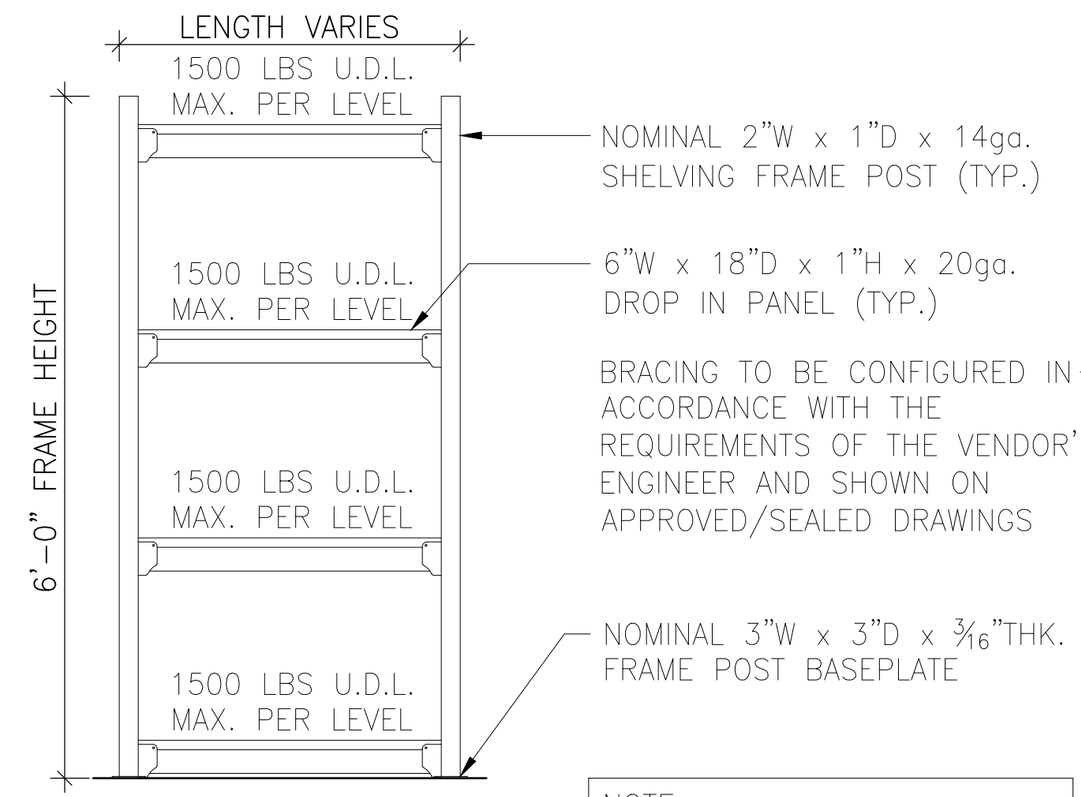

1 / B806 ELEVATION
3/4" = 1'-0"

NOTE:
SUPPLY AND INSTALL ONE
18" D X 36" W X 72" H
METAL SHELF WITH 4 SHELF
LEVELS IN THE JANITOR ROOM.

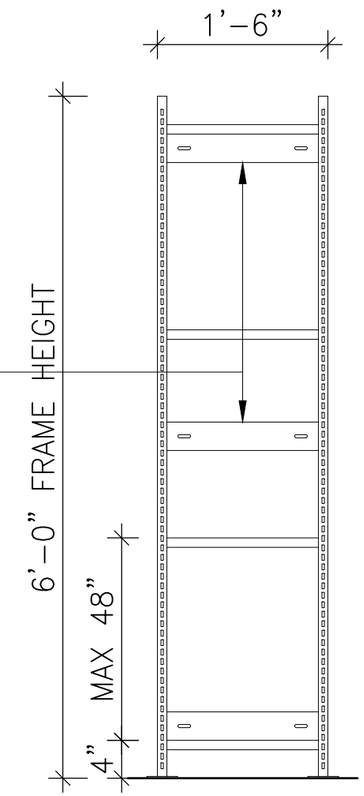

2 / B806 ELEVATION
3/4" = 1'-0"

LCBO	B800 OFFICE/SERVICES	REVISION DATE	REV.	1 of 1	ISSUE DATE	STORE TYPE	STORE #
	JANITOR'S ROOM SHELVING UNIT	2019 NOV	01	B806	2019 NOV		312